Panasonic

Operating Instructions

Memory Card Camera-Recorder

Model No. AG-CX350E

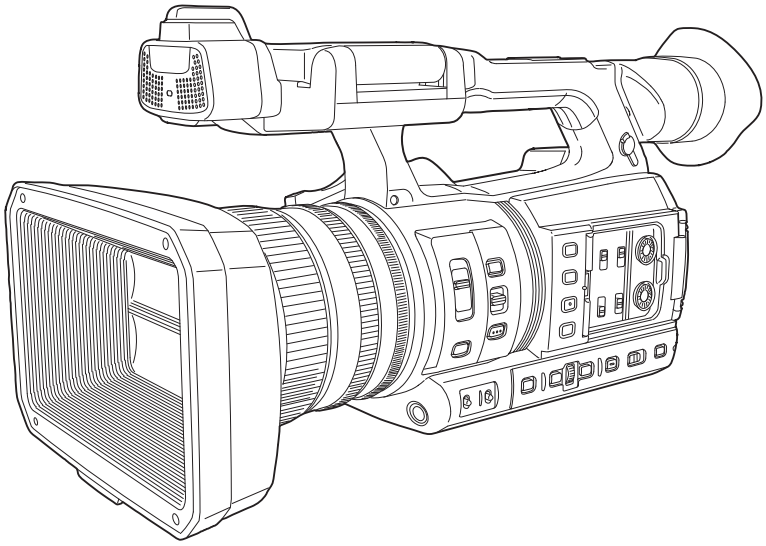

Before using this product, be sure to read “Read this first!” (pages 2 to 5).
Before operating this product, please read the instructions carefully and save this manual for future use.

EJ
W0219MS8124 -YI

ENGLISH
DVQP1833RA

Read this first!

indicates safety information.

WARNING:

- To reduce the risk of fire or electric shock, do not expose this equipment to rain or moisture.
- To reduce the risk of fire or electric shock, keep this equipment away from all liquids. Use and store only in locations which are not exposed to the risk of dripping or splashing liquids, and do not place any liquid containers on top of the equipment.

WARNING:

Always keep memory cards (optional accessory) or accessories (microphone holder screws) out of the reach of babies and small children.

CAUTION:

Do not remove panel covers by unscrewing them. To reduce the risk of electric shock, do not remove cover. No user serviceable parts inside. Refer servicing to qualified service personnel.

CAUTION:

The mains plug of the power supply cord shall remain readily operable.
The AC receptacle (mains socket outlet) shall be installed near the equipment and shall be easily accessible.
To completely disconnect this equipment from the AC mains, disconnect the power cord plug from the AC receptacle.

CAUTION:

Danger of explosion or fire if battery is incorrectly replaced or mistreated.

- Do not disassemble the battery or dispose of it in fire.
- Do not store in temperatures over 60°C.
- Do not expose the battery to excessive heat such as sunshine, fire or the like.

For Battery Pack

- Use specified charger.
- Replace only with same or specified type.

CAUTION:

To reduce the risk of fire or electric shock and annoying interference, use the recommended accessories only.

CAUTION:

In order to maintain adequate ventilation, do not install or place this unit in a bookcase, built-in cabinet or any other confined space. To prevent risk of electric shock or fire hazard due to overheating, ensure that curtains and any other materials do not obstruct the ventilation.

CAUTION:

Do not lift the unit by its handle while the tripod is attached. When the tripod is attached, its weight will also affect the unit's handle, possibly causing the handle to break and hurting the user. To carry the unit while the tripod is attached, take hold of the tripod.

CAUTION:

Excessive sound pressure from earphones and headphones can cause hearing loss.

CAUTION:

Do not leave the unit in direct contact with the skin for long periods of time when in use.
Low temperature burn injuries may be suffered if the high temperature parts of this unit are in direct contact with the skin for long periods of time.
When using the equipment for long periods of time, make use of the tripod.

CAUTION:

Keep metal objects (such as necklaces and hairpins) away from the battery.
Short-circuiting may occur across the terminals, causing the battery to heat up, and you may seriously burn yourself if you touch the battery in this state.

CAUTION:

Do not jar, swing, or shake the unit by its handle while the conversion lens or another accessory is attached.
Due to the added weight of the conversion lens, any strong jolt to the handle may damage the unit or result in personal injury.

Caution for AC Mains Lead

FOR YOUR SAFETY PLEASE READ THE FOLLOWING TEXT CAREFULLY.
This product is equipped with 2 types of AC mains cable. One is for continental Europe, etc. and the other one is only for U.K.

Appropriate mains cable must be used in each local area, since the other type of mains cable is not suitable.

TYPE C (FOR CONTINENTAL EUROPE, ETC. Not to be used in the U.K.) 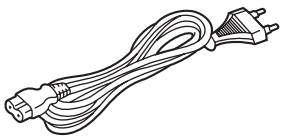	**TYPE BF** (FOR U.K. ONLY) 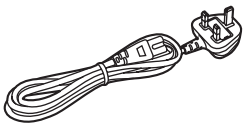

FOR U.K. ONLY

This appliance is supplied with a moulded three pin mains plug for your safety and convenience.
A 5 amp fuse is fitted in this plug.
Should the fuse need to be replaced please ensure that the replacement fuse has a rating of 5 amps and that it is approved by ASTA or BSI to BS1362.
Check for the ASTA mark or the BSI mark on the body of the fuse.

If the plug contains a removable fuse cover you must ensure that it is refitted when the fuse is replaced.
If you lose the fuse cover the plug must not be used until a replacement cover is obtained.
A replacement fuse cover can be purchased from your local Panasonic Dealer.

How to replace the fuse

1. Open the fuse compartment with a screwdriver.

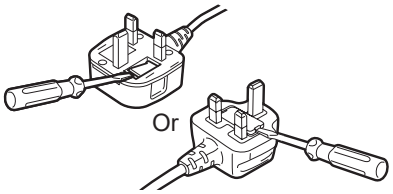

2. Replace the fuse.

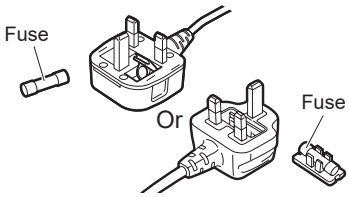

For Turkey
AEEE Yönetmeliğine Uygundur.
AEEE Complies with Directive of Turkey.

The rating plate is on the underside of the Camera Recorder, Battery Charger and AC Adaptor.

Manufactured by:
Panasonic Entertainment & Communication Co., Ltd.
1-10-12, Yagumo-higashi-machi, Moriguchi City, Osaka, Japan
Importer:
Panasonic Connect Europe GmbH
Hagenauer Strasse 43, 65203 Wiesbaden, Germany
Authorized Representative in EU:
Panasonic Connect Europe GmbH
Panasonic Testing Centre
Winsbergring 15, 22525 Hamburg, Germany

Importer for UK:
Panasonic Connect UK,
a branch of Panasonic Connect Europe GmbH,
Maxis 2, Western Road, Bracknell, Berkshire, RG12 1RT

UK CA

■ **Batteries that may be used with this product (as of April 2024)**
Panasonic AG-VBR59 / AG-VBR89 / AG-VBR118 / VW-VBD58 batteries may be used with this product.

Note regarding the Power Management function specified under COMMISSION REGULATION (EC) No 1275/2008 implementing Directive 2009/125/EC of the European Parliament and of the Council.

This device is designed and manufactured for use at a broadcasting station and/or in a similar environment.
This device is not equipped with a Power Management function or the Power Management function is set to OFF as it will prevent the device from fulfilling its intended purpose for the reasons below.

1. If the device is a Studio Camera, a Weather Camera, a Mixer or other processor:
   A Power Management function may cause the device to suddenly stop during recording or while On Air.
2. If the device is a Studio Monitor:
   A Power Management function may cause video for the confirmation of whether a signal is normal, or whether the signal has been lost, to be un-viewable.
3. If the device is a Camera Recorder:
   A professional camera recorder must be able to start quickly at any time, but a Power Management function will cause an increase in the time taken to resume from Stand-by mode.

It has been found that counterfeit battery packs which look very similar to the genuine product are made available to purchase in some markets. Some of these battery packs are not adequately protected with internal protection to meet the requirements of appropriate safety standards. There is a possibility that these battery packs may lead to fire or explosion. Please be advised that we are not liable for any accident or failure occurring as a result of use of a counterfeit battery pack. To ensure that safe products are used we would recommend that a genuine Panasonic battery pack is used.

To remove the battery

Main Power Battery (Lithium ion Battery)
(Refer to page 30 for the detail.)
Press the battery release button.

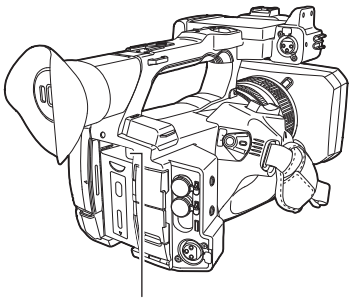

Battery release button

Back-up Battery (Lithium Battery)
- For the removal of the battery for disposal at the end of its service life, please consult your dealer.

Battery Charger / AC Adaptor
Disconnect the AC mains plug from the AC mains socket when not in use.

WARNING: THIS PRODUCT CONTAINS A COIN BATTERY

- INGESTION HAZARD: This product contains a button cell or coin battery.
- DEATH or serious injury can occur in 2 hours or less if swallowed or placed inside any part of the body.
- The battery is hazardous, KEEP new and used batteries OUT OF REACH of CHILDREN.
- Seek immediate medical attention if a battery is suspected to be swallowed or inserted inside any part of the body.

Disposal of Old Equipment and Batteries
Only for European Union and countries with recycling systems

These symbols on the products, packaging, and/or accompanying documents mean that used electrical and electronic products and batteries must not be mixed with general household waste.
For proper treatment, recovery and recycling of old products and used batteries, please take them to applicable collection points in accordance with your national legislation.
By disposing of them correctly, you will help to save valuable resources and prevent any potential negative effects on human health and the environment.
For more information about collection and recycling, please contact your local municipality, dealer or supplier.
Penalties may be applicable for incorrect disposal of this waste, in accordance with national legislation.

Note for the battery symbol (bottom symbol):
This symbol might be used in combination with a chemical symbol. In this case it complies with the requirement set by the Directive for the chemical involved.

■ **The symbols on this product (including the accessories) represent the following:**

~	AC
⎓	DC
I	ON
⏻	Standby (OFF)
⧈	Class II equipment (The construction of the product is double-insulated.)

Trademark

- SDXC logo is a trademark of SD-3C, LLC.
- AVCHD, AVCHD Progressive, and AVCHD Progressive logo are trademarks of Panasonic Holdings Corporation and Sony Corporation.
- This is manufactured based on license from Dolby Laboratories, Inc. Dolby, Dolby Audio, and the double-D symbol are trademarks of Dolby Laboratories.
- The terms HDMI and HDMI High-Definition Multimedia Interface, and the HDMI Logo are trademarks or registered trademarks of HDMI Licensing Administrator, Inc. in the United States and other countries.
- Microsoft® and Windows® are registered trademarks or trademarks of Microsoft Corporation in the United States and/or other countries.
- Screenshots are used according to Microsoft Corporation guidelines.
- Intel®, Pentium®, Celeron®, and Intel® Core™ are trademarks of Intel Corporation in the United States and/or other countries.
- Mac and Mac OS are trademarks of Apple Inc. registered in the United States and/or other countries.
- iPhone/iPad are trademarks of Apple Inc. registered in the United States and/or other countries.
- App Store is a service mark of Apple Inc.
- Android and Google Play are trademarks or registered trademarks of Google LLC.
- Wi-Fi® is a registered trademark of Wi-Fi Alliance®.
- WPA™ and WPA2™ are trademark of Wi-Fi Alliance®.
- NDI® is a registered trademark of NewTek, Inc.
- All other names, company names, product names, etc., contained in this instruction manual are trademarks or registered trademarks of their respective owners.

License

- This product is licensed under the AVC Patent Portfolio License. All other acts are not licensed except private use for personal and non-profit purposes such as what are described below.
  - To record video in compliance with the AVC standard (AVC Video)
  - To play back AVC Video that was recorded by a consumer engaged in a personal and non-commercial activity
  - To play back AVC Video that was obtained from a video provider licensed to provide the video
    Visit the MPEG LA, LLC website (http://www.mpegla.com/) for details.
- Separate license contract with MPEG-LA is required to record in a memory card with this product and to distribute that card to end users for a profit. The end user mentioned here indicates a person or organization that handles contents for a personal use.

Software information about this product

1 **This product includes software licensed under GNU General Public License (GPL) and GNU Lesser General Public License (LGPL), and customers are hereby notified that they have rights to obtain, re-engineer, and redistribute the source code of these software.**

2 **This product includes software licensed under MIT-License.**

3 **This product includes software developed by the OpenSSL Project for use in the OpenSSL Toolkit (http://www.openssl.org/).**

4 **This product includes software licensed under OpenBSD License.**

5 **This software is based in part on the work of the Independent JPEG Group.**

6 **This product includes software licensed under the MOZILLA PUBLIC LICENSE.**

For details on each license, refer to the terms of license.

The terms of license can be displayed using the following method.

- Select the [OTHERS] menu → [USB DEVICE] → [SERVICE MODE] → [YES].
  Select “LICENSE.TXT” in the external drive recognized by the computer.

For details on these descriptions (originally provided in English) and how to obtain the source code, visit the following website.

https://pro-av.panasonic.net/

We do not accept inquiries about the details of the source code obtained by the customer.

Excluding the open source software licensed based on GPL/LGPL, etc., transferring, copying, reverse assembling, reverse compiling, and reverse engineering of the software included in the camera is prohibited. Also, exporting of any software included in the camera against the export laws and regulations is prohibited.

How to read this document

■ Illustrations

- Illustrations of the product appearance, menu screens, etc., may vary from the actual.

■ Conventions used in this manual

- Words and phrases in [ ] brackets indicate content displayed in the LCD monitor.
- Words and phrases in < > brackets indicate design text used on this camera, such as button names.

■ Reference pages

- Reference pages in this document are indicated by (page 00).

■ Terminology

- SD memory card, SDHC memory card, and SDXC memory card are referred to only as “SD card” unless distinguished otherwise.
- A memory card with the “microP2” logo is referred to as a “microP2 card”.
- SD card and microP2 card are referred to only as a “memory card” unless distinguished otherwise.
- Video that is created during a single recording operation is referred to as a “clip”.

Contents

Read this first! 2

Chapter 1 Overview 9

Before using the camera 10
Accessories 13
When turning on the power for the first time 14
[TIME ZONE] 14
[CLOCK SETTING] 14
Use of the camera on a system 15
Basic configuration devices 15
Expanded configuration devices 15
What you can do with this camera 16
Recording to the memory card 16
Linking to external devices 16
Connecting to the network 17
USB tethering connection 17

Chapter 2 Description of Parts 18

Camera 19
Left side 19
Right side 20
Front side 22
Rear side 23
Top side 24
Basic operation 26
Multidial operation 26
Touch operation of the LCD monitor 26

Chapter 3 Preparation 27

Power supply 28
Charging the battery 28
Attaching and removing the battery 30
Using the AC adaptor 31
Mounting accessories 32
Adjusting the grip belt 32
Attaching the shoulder strap 32
Mounting the lens hood 32
Mounting the eye cup 33
Mounting the external microphone 34
Attaching a tripod 34
Mounting accessories 35
Turning on/off the power 36
How to turn on the power 36
How to turn off the power 36
Charging the built-in battery 37
Setting the date/time of the internal clock 38
Preparing the memory card 39
Memory cards supported by the camera 39
Preventing unintentional erasing 40
Status of the card access lamp and memory card 40
Inserting/removing the memory card 41
Formatting the memory card 41
Recording time of the memory card 42
Handling the recording data 43
Setting of time data 47
Definition of time data 47
User bits settings 47
Setting the time code 48
Presetting the time code to external 49
Supplying the time code externally 50
Assigning function to the USER buttons 51
Functions assigned to USER buttons 51
Checking the function assigned to the USER buttons 53
Adjusting and setting the LCD monitor 54
Using the LCD monitor 54
Adjusting the LCD monitor 54
Mirror shooting 54
Adjusting and setting the viewfinder 55
Using the viewfinder 55
Adjusting the viewfinder 55
Tally lamp 56

Chapter 4 Operation 57

Basic operation of the screen 58
Major button operation and screen display 58
Major button operation and switching screen 59
Operating each screen 60
Camera image screen 60
Thumbnail screen 60
Operation icon screen 60
Basic operation of the menu 61
Configuration of the menu 61
Displaying the menu 62
Operating the menu 63
Initializing the menu 64
Menu settings 65
[THUMBNAIL] menu 65
[CAMERA] menu 65
[SCENE FILE] menu 70
[AUDIO] menu 80
[VIDEO OUT/LCD/VF] menu 83
[RECORDING] menu 93
[NETWORK] menu 97
[SYSTEM] menu 103
[OTHERS] menu 104
Factory setting value of the scene file 108
[SCENE FILE] menu 108
Target items for scene file/setup file/initialization 111
[THUMBNAIL] menu 111
[CAMERA] menu 111
[SCENE FILE] menu 112
[AUDIO] menu 114
[VIDEO OUT/LCD/VF] menu 114
[RECORDING] menu 116
[NETWORK] menu 116
[SYSTEM] menu 117
[OTHERS] menu 118
Handling setting data 119
Scene files 119
Setup file 120

Chapter 5 Shooting 122

Shooting 123
Selecting the resolution, codec, and frame rate for recording video 124
Adjustable settings when shooting 126
Iris 126
Gain 126
Super gain 126
Brightness adjustment 126
Macro 126
Focusing (manual focus) 126
Area mode function 127
Adjusting the white and black balance 128
White balance adjustment 128
Black balance adjustment 129
Using the zoom function 131
Adjusting the zoom position 131
Image quality adjustment 132
Detail function 132
Skin tone function 132
RB gain control function 133
Chroma setting function 133
Matrix function 134
Color correction function 135
Black control function 135
Gamma function 135
Knee function 136
White clip function 136
Variable frame rate (VFR) recording function/super slow recording function 137
Variable frame rate (VFR) 137
Super slow 137
Audio input 138
Switching the audio input 138
When using the built-in microphone 138
When using an audio device or an external microphone 139
Adjusting the audio recording level 139
Monitoring the audio 140
Confirming audio input setting 140
Special recording function 141
Pre-recording 141
Relay recording 141
Simultaneous recording 142

Background recording 143
Interval recording 144
IR recording 144
Clip metadata recording function 144
Shot mark recording function 147
Recording the proxy data 148
Convenient shooting functions 149
Zebra patterns display 149
Displaying the center marker 149
Displaying the safety zone marker 150
Displaying frame marker 150
Focus assist function 150
Face detection/tracking AE&AF function 152
Optical image stabilizer function 153
Dynamic range stretcher function 153
Time stamp function 153
Waveform monitor function 154
Digital zoom function 154
Level gauge 155
Color bars 155
Operation icon screen display 156
Displaying the operation icon screen 156
Multi manual function 157
Displaying the operation icon screen 157
Setting the variable value for the white balance 157
Setting the shutter speed 157
Setting the synchro scan shutter speed 157
Setting the frame rate of the variable frame rate recording function 158
Adjusting the area size/area position of the area mode function 158
Adjusting the width of the auto focus area 158

Chapter 6 Playback 159

Thumbnail operation 160
Thumbnail operation overview 160
Thumbnail screen 160
Copying clips 164
Deleting clips 165
Protecting clips 166
Adding shot mark to a clip 166
Restoring clips 167
Linking the incomplete clips 167
Playing back clips 168
Useful playback function 170
Resume play 170
Still image recording function 171

Chapter 7 Output and Screen Display 172

Output format 173
Format that can be output from the <SDI OUT> terminal 173
Format that can be output from the <HDMI> terminal 173
Screen status display 175
Screen display during shooting 175
Screen display during playback 180
Checking and displaying shooting status 180
Mode check display 182

Chapter 8 Connecting to External Devices 185

Connecting with headphones and TV/monitor 186
Headphones 186
Remote control 186
TV/monitor 187
Connection function via the <USB3.0 DEVICE>/<USB2.0 HOST> terminal 188
Connection with a computer in card reader mode 188
Remote operation by iPhone/iPad or Android terminal 189
Connecting the remote camera controller (AW-RP150G) 190

Chapter 9 Network Connection 191

Network connection 192
Available functions 192
Preparing for connection 193
For the wireless module 193
For the wired LAN 193
For USB tethering 193
Network settings 194
Wireless LAN settings 194
Wired LAN settings 195
USB tethering setting 196
Specifying the network settings using the settings tool 197
Confirming the network status 198
Checking the network environment 198
Saving the check results 199
Connecting to the iPhone/iPad or Android terminal 200
Mounting the wireless module 200
Camera settings 200
Preparing the CX ROP app 201
Connecting to the CX ROP application 201
Operation while the CX ROP app is connected 201
Connecting to the remote camera controller (AW-RP150G) 202
Camera settings 202
Remote camera controller AW-RP150G setting 202
Operation during remote control 202
Streaming function 203
Basic setting of the camera 203
Setting for each protocol and starting the streaming 205
Management of setting information 207
Entering the setting using the setting tool 208
NDI|HX function 210
Camera settings 210
Using the cloud service 212
Remote operation of the streaming 212
Contents upload 212
Other operations 213

Chapter 10 Notes 214

Frequently asked questions 215
Power supply 215
Battery 215
Battery charger 215
Memory card 215
Shooting 215
Playback 216
Others 216
Warning system 217
Cases indicated by error messages 217
Recording function that cannot be used simultaneously 221
Updating the camera firmware 222
Cleaning and storing 223
Cleaning the camera body 223
Cautions when storing the camera recorder 223

Chapter 11 Specification 224

Dimensions 225
Specifications 226
General 226
Camera unit 226
Memory card recorder 227
Digital video 228
Digital audio 228
Streaming 228
Video output 229
Audio input/output 229
Other input/output 229
Monitor 229
AC adaptor 230
Battery charger (AG-BRD50) 230
Battery pack (AG-VBR59) 230
Index 231

Chapter 1 Overview

Before using the camera, read this chapter.

Before using the camera

■ Before using the camera, always check if the built-in battery is not consumed, and then set the date/time.

The date of the internal clock of the camera resets to January 1, 2019 if the built-in battery is exhausted. This may result in the meta data of the clip not being recorded correctly, and it may not display correctly in the thumbnail screen.

Connect the AC adaptor to the camera or mount a battery when recharging the built-in battery.

The date/time set on the camera is maintained for approximately four months when left in this state for approximately 24 hours.

(The built-in battery is charged even when the power switch is set to < ❙ > (ON))

For details about setting the time zone and date/time, refer to [TIME ZONE] (page 14) and [CLOCK SETTING] (page 14).

■ Do not use the unit in oily-smoky or dusty places.

Performance may be adversely affected if small particles or other foreign objects get inside the product.

Take extra care in environments where a special effect such as theatrical smoke is used.

■ When using this product during rain or snow or when at the beach, be careful that water does not get inside the camera.

Water causes damage to the camera and memory card. (Repair may be impossible)

■ Keep the camera away from devices that produce magnetism (TVs, TV games, etc.).

- Do not use the camera on top of a TV or around it. Image or audio of the camera may be distorted by the electromagnetic wave emitted from a TV.
- The recorded content may be damaged or image may be distorted by a strong magnetic field produced by speaker or large motor.
- Do not use the camera on top of a microcomputer or around it. Image or audio of the camera may be distorted by the electromagnetic wave emitted from a microcomputer.
- The camera may not operate properly due to a harmful effect from a device producing magnetism. In such case, turn off the camera and either remove the battery or unplug the AC adaptor from the power outlet. Then, mount the battery or connect the AC adaptor again. After that, turn on the camera.

■ Do not use the camera near a radio transmitter or high-voltage device.

Using the camera recorder near a radio transmitter or high-voltage device may cause harmful effect to the recorded video or audio.

■ Take care so sand and/or dust do not get inside the camera when using the camera at the beach, etc.

Sand and dust may damage the camera and memory card. (Be careful when inserting or removing the memory card)

■ AC adaptor, battery charger, and battery

- It may take more time to charge or may not be able to charge when the temperature of the battery is extremely high or extremely low.
- When the charging lamp continues to flash in orange, check if there is any debris, foreign object, or dirt attached to the terminal section of the battery or the battery charger, and reconnect it correctly. Always disconnect the power plug from the power outlet before removing the debris, foreign object, or dirt attached to the terminal section.
- The charging lamp will flash in orange when the temperature of the battery is extremely high or low.
  Then, charging will start automatically after the battery reaches chargeable temperature.
- If the charging lamp continues to flash even when the battery is at its optimal temperature, the battery or battery charger may be damaged. Consult the dealer.
- Noise may be generated in radio when the camera is used close to a radio (especially when receiving AM). Keep a distance of 1 m or more when using.
- Oscillating sound may generate inside the AC adaptor or the battery charger during the use, but this is not a malfunction.
- Always disconnect the power plug from the power outlet after the use. (Power of approximately 0.1 W is consumed by the AC power itself if kept connected)
- Do not get the terminal section of the AC adaptor, the battery charger, or the battery dirty. Install the device close to the power outlet so the disconnection device (power plug) can be easily reached.

■ Memory cards

- The surface of camera or the memory card may get slightly hot when used for a long period of time, but this is not a malfunction.
- The amount of memory included on the label of the memory card is the total amount of memory below.
  - Capacity to protect and manage copyright
  - Capacity usable as the normal memory on the camera or a PC.
- Do not give a strong impact to, bend, or drop the memory card.
- Memory card data may become destroyed or erased in the following cases.
  - Electrical noise or static electricity
  - Malfunction of the camera or the memory card
- Do not perform the following operations when accessing the memory card (the card 1 access lamp/card 2 access lamp is flashing in orange).
  - Removing the memory card
  - Disconnecting battery or the AC adaptor without turning off the camera
  - Apply vibration of impact

■ Take care not to drop the camera when carrying the camera.

- Strong impact will damage the camera, and it may not operate properly.
- Hold the handle or grip when carrying the camera, and handle it carefully.

■ Do not apply insecticide or volatile material to the camera.

- The camera may deform or the paint may peel off when insecticide or volatile material is applied.
- Do not allow the camera to remain in contact with a rubber or vinyl object for a long period of time.

■ Disconnect the battery or disconnect the AC cable from the power outlet after the use.

■ Battery characteristics

The battery is a rechargeable lithium-ion battery. It produces electrical energy via an internal chemical reaction. This chemical reaction is effected by the ambient temperature and humidity. The usable time of the battery becomes shorter when the temperature gets higher or lower. When used in an environment with extremely low temperature, it can only be used for approximately five minutes.

When the battery is in an extremely hot environment, its protective function will operate and the camera recorder cannot be used temporarily.

■ After using the camera recorder, be sure to remove the battery.

Securely remove the battery from the camera.

(Minute current is consumed even if the camera is turned off when the battery is kept mounted)

The battery will become over discharge and may become unusable even if it is recharged when the battery is kept mounted for long period of time.

Do not remove the battery when the power is turned on.

Turn off the power and remove the battery after the operation lamp goes completely out.

■ Take proper care of the battery terminal.

Do not allow dust or foreign objects on the battery terminal.

Confirm that the battery and its terminal section is not deformed when the battery is dropped by mistake.

Do not mount the deformed battery into a camera or mount to the battery charger. This may damage the camera or the battery charger.

■ Cautions when throwing memory cards away or transferring them to others

Formatting memory cards or deleting data using the functions of the camera or a computer will merely change the file management information: it will not completely erase the data on the cards.

It is recommended to completely erase the data in following method when discarding/conveying.

- Physically destroy the memory card itself
- Completely erase the data in the memory card using a commercially available data erasing software for PC, etc.

Users are responsible for managing the data stored in their memory card.

■ LCD monitor and viewfinder

- Do not continuously display the same image or text on the LCD monitor for a long period of time. The image may be burned on to the screen. It will return to normal after leaving the camera recorder turned off for several hours.
- Condensation sometimes forms on the LCD panel of the LCD monitor in locations subject to extreme temperature differences. If this happens, wipe with a soft, dry cloth.
- The LCD monitor will be slightly darker than normal immediately after the power is turned on when the camera is very cold. It will return to its regular brightness when the internal temperature increases.
- The LCD monitor and viewfinder (organic EL) are managed with high precision so that at least 99.99% of the dots are effective pixels and 0.01% or less are invalid pixels and always lit. This is not a malfunction and it has no effect whatsoever on the recorded images.
- The viewfinder for this camera uses an organic EL. The image may burn into the screen if the same image or letters are left displayed on the screen for a long time. There is no problem with the recorded images.
  Switch the screen by turning off the screen or by using the eye sensor, etc.
- It may become difficult to see or difficult to recognize the touch when a LCD protection sheet is affixed.

■ Caution regarding laser beams

The MOS sensor may be damaged if the MOS sensor is subjected to light from a laser beam.

Take sufficient care to prevent laser beams from striking the lens when shooting in an environment where laser devices are used.

■ Note the following points.

- If you prepare to record important images, always shoot some advance test footage to verify that both pictures and sound are being recorded normally.
- Panasonic will not assume liability when video or audio recording fails due to a malfunction of the camera or the memory card during the use.
- Set the calendar (datetime of the internal clock) and the time zone, or check the setting before recording. This will have an effect on the management of the recorded contents.

■ Exemption of liability

Panasonic is not liable in any way regarding following.

1. **Incidental, special, or consequential damages caused directly or indirectly by the camera**
2. **Damages, breakage of the camera, etc., caused by misuse or carelessness of the customer**
3. **When disassembly, repair, or modification (including the software) of the camera is performed by the customer**
4. **Inconveniences, damnification, or damages by not being able to record and/or display the video due to any reasons including failure or malfunction of the camera**
5. **Inconveniences, damnification, or damages resulting from malfunction of the system combining with any third party equipment**
6. **A liability claim or any claim for a privacy violation by an individual or a group that was the subject of the video that the customer has shot (including recording) that became public by any reason (including using with the network user authentication turned OFF)**
7. **The registered information is lost due to any reason (including initializing this camera because the authentication information such as user name or password is forgotten)**

■ Cautions regarding network

Since this camera is used connected to a network, following mischief may occur.

1. **Leaking or divulging of information through the camera**
2. **Fraudulent operation of the camera by a malicious third party**

3 Obstruction and/or stopping of the camera by a malicious third party

It is customer's responsibility to take sufficient network security measures including the following to prevent damage caused by such mischief. Please note that Panasonic is not liable in any way for damage caused by such mischief.

- Use the camera on a network where safety is secured by using a firewall, etc.
- When using the camera on a system where a computer, tablet, smartphone, or other device is connected, make sure that checking and cleaning of infection by computer virus and malicious program is performed periodically.
- In order to prevent malicious attacks, use text strings that have 8 characters or more including 3 or more character types for the authentication information (such as user name and password) so that a third party cannot guess your authentication information.
- Set and store the authentication information (user name, password, etc.) appropriately so it is not visible to the third party.
- Periodically change the authentication information (user name, password, etc.) and do not use the same authentication information as other accounts.
- To prevent the setting information in the camera to leak to the network, execute measure such as restricting the access with user authentication, etc.
- Do not install in a location where the camera, cable, etc., can be easily damaged.

■ Security

- Take caution in handling the camera or memory card so it is not stolen, lost or neglected, and handle with care when discarding or providing. Note that Panasonic is not liable to leakage, falsification, or loss of information caused by them.
- Delete the user ID and password information when disposing of or transferring ownership of the unit.

Accessories

Battery (Parts No.: AG-VBR59) (page 28)

Battery charger (Parts No.: AG-BRD50) (page 28)

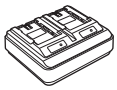

AC adaptor (page 28)

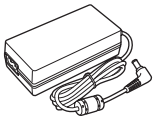

AC cable (x 2) (page 28)

- For AC adaptor

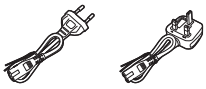

Shoulder strap (page 32)

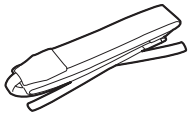

Microphone holder (page 34)

Microphone holder screws (page 34)

- Length 12 mm (x 2)

Grip belt (page 32)

- Already mounted to the camera.

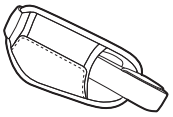

Lens hood (page 32)

- Already mounted to the camera.

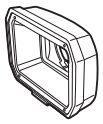

Eye cup (page 33)

NOTE

- Appropriately discard the AC cable cap (if attached) and packing materials after taking the product out.

When turning on the power for the first time

The time zone, date, and time are not set when the camera is shipped.

[TIME ZONE] is displayed in the LCD monitor when the power is turned on for the first time.

Follow the guidance and make the settings in the order of [TIME ZONE] and then [CLOCK SETTING].

- There are two methods of operation: a method to operate with the multidial or the <◀◀> button, <■> button, <▶▶> button and <▶/❚❚> button, or a method to touch the LCD monitor.

[TIME ZONE]

Set the time difference from the Greenwich Mean Time.

1 Set the time difference.

2 Select [SET].

Once the setting for [TIME ZONE] is completed, the [CLOCK SETTING] screen is displayed.

NOTE

- The setting for the date/time of the camera changes together with the time zone settings.
- This can also be set with the [OTHERS] menu → [CLOCK] → [TIME ZONE].

[CLOCK SETTING]

Set the year, month, date, and time.

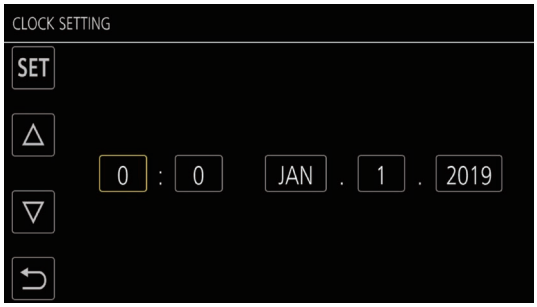

1 Set the year, month, date, and time.

2 Select [SET].

Once the setting is complete, the camera image screen is displayed on the LCD monitor.

NOTE

- This can also be set with the [OTHERS] menu → [CLOCK] → [CLOCK SETTING].

Use of the camera on a system

Parts other than the camera are optionally available. Use the following recommended parts.

Basic configuration devices

Equipment necessary for shooting with the camera, such as batteries, etc.

Part name	Part No.	Remark
Super-directional electret stereo microphone (phantom +48V)	AG-MC200G	“Mounting the external microphone” (page 34)
Battery	AG-VBR59 (7.28 V, 5900 mAh, product compatible to included battery) AG-VBR89 (7.28 V, 8850 mAh) AG-VBR118 (7.28 V, 11800 mAh) VW-VBD58 (7.2 V, 5800 mAh)	“Attaching and removing the battery” (page 30)
Battery charger	AG-BRD50 (Product compatible to included battery charger) AG-B23	“Charging the battery” (page 28)
Memory card*	Visit the support desk at the website*	“Preparing the memory card” (page 39)

* For the latest information not included in these Operating Instructions, refer to the support desk at the following website.
https://pro-av.panasonic.net/

Expanded configuration devices

In addition to the basic components, a wireless module can be used.

Part name	Part No.	Remark
Wireless module	AJ-WM50	“For the wireless module” (page 193)

For details on wireless modules that can be connected, refer to the support desk at the following website.
https://pro-av.panasonic.net/

What you can do with this camera

This camera is an industrial 4K hand-held camera recorder equipped with a 1.0-inch sensor.

- Equipped with a high-sensitivity 1.0-inch MOS sensor for approximately 15.03 million effective pixels.
  Achieves F12 (at 59.94 Hz)/F13 (at 50 Hz) in the high-sensitivity mode.
- The UHD (3840×2160) 59.94p/50p signal can be recorded to the memory card with high image quality and high efficiency 10 quantizing bits.
- Equipped with wide angle 24.5 mm (35 mm conversion value), approximately 32x zoom using the I.ZOOM function (approximately 24x zoom when recording in UHD), and hybrid optical image stabilizer (Hybrid O.I.S.).
- Equipped with a LAN terminal that supports live streaming and wired control (Gigabit Ethernet), in addition to the input/output terminals (XLR input/SDI output) which are necessary for business use.

Recording to the memory card

Recording in following types is possible.

- P2 recording (P2 MXF compatible)
- UHD and FHD recording
  (4:2:0 (10-bit) MOV recording (HEVC)/4:2:0 (8-bit) MOV recording/4:2:2 (10-bit) MOV recording)
- AVCHD recording
- Variable frame rate recording
  (Supports 120fps/100fps shooting at the FHD resolution)
- Simultaneous recording
- Relay recording
- Interval recording
- Background recording
- Pre-recording
- 4ch audio recording

Linking to external devices

Connecting to monitor

A monitor can be connected to output images.

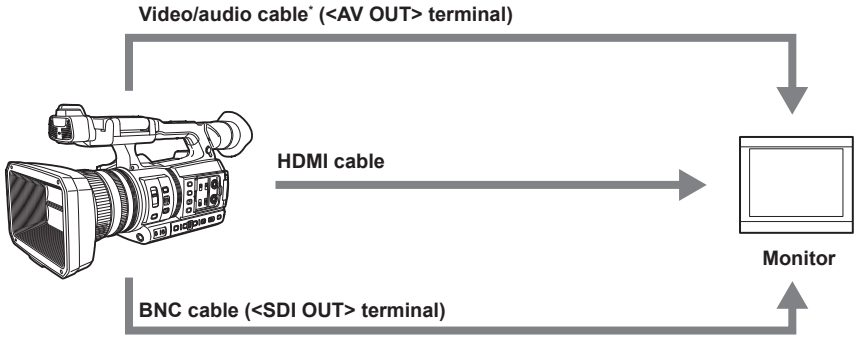

* Use a commercial video/audio cable (4-pole mini plug).
Check the wire specifications of the 4-pole mini plug.

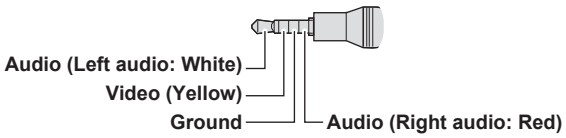

- Use the double shielded cable supporting 4K/60P as the HDMI cable (optional). It is also recommended to use the Panasonic 4K/60P compatible HDMI cable.
- For the BNC cable (optional) connected to the <SDI OUT> terminal, prepare a double-shielded cable equivalent to 5C-FB.

Card reader mode

Data (files) for performing nonlinear editing on a computer are transferred.

- The camera supports USB 3.1 (GEN1).

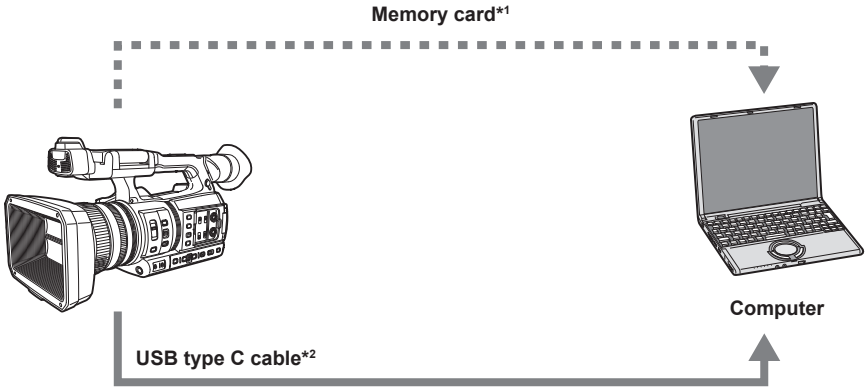

*1 Memory cards are optionally available. They are not supplied with the camera.

*2 A USB type C cable is not supplied with the camera.
Use a commercial USB-type C cable. Use of a cable no longer than 1.5 m is recommended.
The camera does not offer a bus-powered function.
Data from a computer cannot be written to the memory card inserted into the camera.

Connecting to the remote camera controller (AW-RP150G)

Connects the remote camera controller AW-RP150G (optional) via LAN cable to control some functions remotely.

Connecting to the network

Wired LAN connection

- Streaming from the camera is possible by using the <LAN> terminal.
- Remote control is possible using the remote camera controller (AW-RP150G).

NOTE

- Same segment is recommended for the network which the camera and the controller or computer is connected to.
  When connecting to a different segment, check carefully before operation as there may be behavior inherent to a setting unique to the network device, etc.

Wireless LAN connection

The camera can be connected to the wireless LAN by attaching a wireless module (optional) compatible to the camera to the <USB2.0 HOST> terminal of the camera.

The following operations can be performed from iPhone/iPad or Android terminal that has the CX ROP app installed.

- Checking camera status
- Camera remote control (focus, zoom, image quality settings, recording control such as start/end recording, and time code/user bits settings)
- Menu Operations
- Starting and stopping streaming (when the function is assigned to the USER button)

The camera supports the multi-camera function that a camera selected from up to eight cameras is controlled remotely from a single device.

For details of the wireless module supported by the camera and the operation of the CX ROP app, visit the support desk at the following website or refer to the online help for the app.

https://pro-av.panasonic.net/

USB tethering connection

Connect a USB tethering device (iPhone/iPad or Android device) to the <USB2.0 HOST> terminal of the camera using the USB cable to connect the camera to the Internet using USB tethering function.

NOTE

- For details on USB tethering devices that have been confirmed to connect to the camera, refer to the support desk at the following website.
  https://pro-av.panasonic.net/

Chapter 2 Description of Parts

This chapter describes the names, functions, and operations of parts on the camera.

Camera

Left side

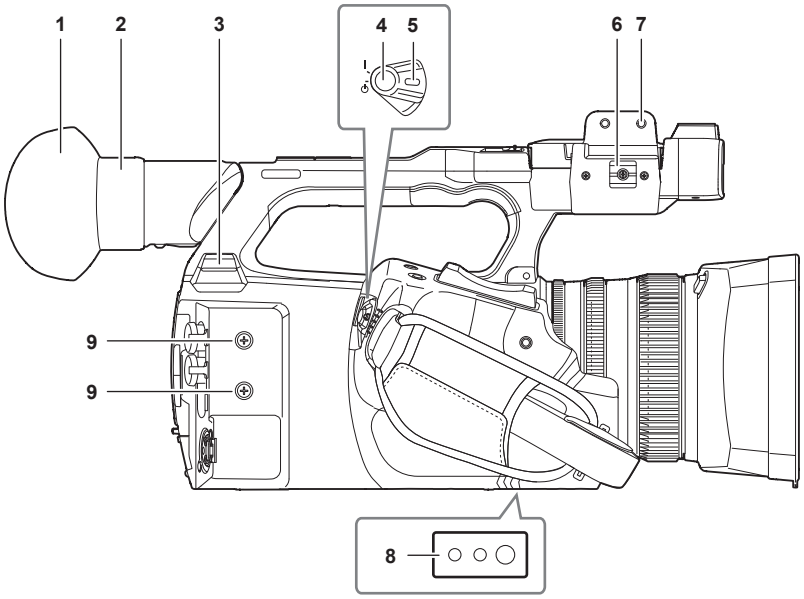

1 Eye cup

2 Eyepiece
Do not leave the eyepiece pointed toward the sun. Doing so might damage the devices inside.

3 <USB2.0 HOST> terminal
Can connect to wireless LAN when the wireless module (optional) compatible to camera is mounted.
When connecting the camera to iPhone/iPad or Android device using USB cable, connection to the network is possible using USB tethering.

4 REC button (on the grip)
Starts or stops the recording.
Used for direct shooting in thumbnail mode.

5 Power switch
Switches between power on/standby.
To turn on, set the power switch to < ❙ > (ON). To set to standby, set the power switch to < ⏻ > (standby).

6 Microphone cable clamp
Fixes the external microphone cable.

7 Microphone holder mounting section
Mounts the supplied microphone holder with microphone holder screws.

8 Tripod holes
Attaches the tripod. (bottom)
- Mounting hole size
  - 1/4-20 UNC (screw length 5.5 mm or shorter)
  - 3/8-16 UNC (screw length 5.5 mm or shorter)

9 Accessory mounting holes
Attaches accessories.
The weight of the accessory should be no more than 2 kg including the mounting fixture.
- Mounting hole size
  - Mounting screw size: M3
  - Mounting hole depth: 6 mm
  - Mounting hole pitch: 25 mm

Right side

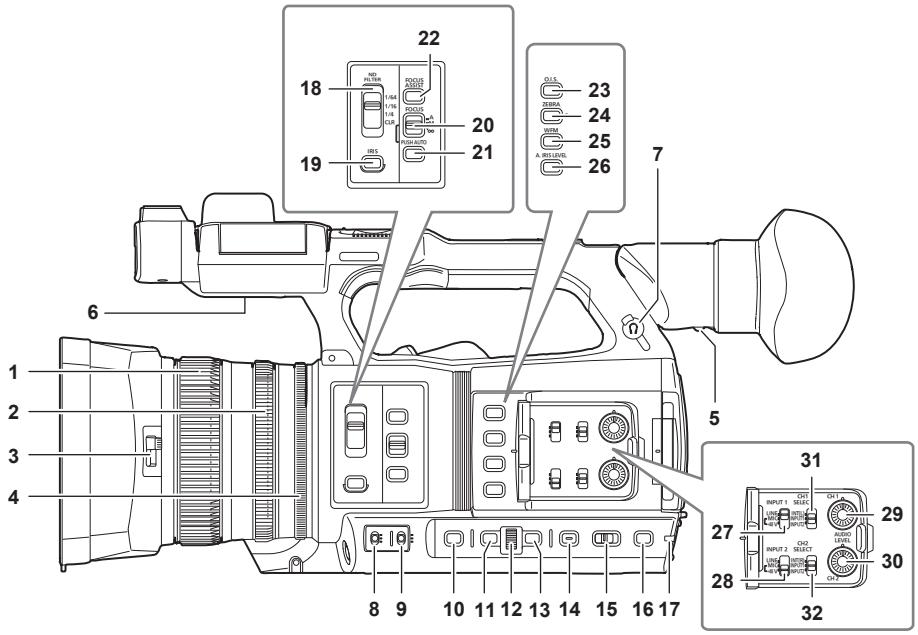

1 Focus ring
Manually focuses when the <FOCUS> switch is set to <M>.

2 Zoom ring
Manually adjusts the zoom lens.

3 Lens cover switching lever
Opens/closes the lens cover.

4 Iris ring
Adjusts the lens iris manually when the manual iris is set with the <IRIS> button.

5 Diopter adjustment lever
Adjusts the diopter scale so that the viewfinder screen can be viewed clearly.

6 Built-in speaker
Outputs audio during playback.
Audio is not output from the built-in speaker when headphones are connected to the headphone terminal.

7 Headphones terminal
Connects audio monitoring headphones.

8 <GAIN> switch
Switches the brightness of the screen according to the lighting conditions under which you are shooting.

9 <WHITE BAL> switch
Selects the method for adjustment of the white balance.
- <PRST>: Adjusts the white balance to the preset value. [3200K], [5600K], and [VAR] toggle each time the <AWB> button is pressed.
- <A>/<B>: Selects when using the stored value for the adjustment of the white balance.

10 <SHUTTER> button
Toggles the shutter mode.

11 <MENU> button
Displays the menu. Pressing the <MENU> button while the menu is displayed closes the menu.
Press the button while the thumbnail screen is displayed to display the operation screen of the thumbnail menu, and clips can be deleted.

12 Multidial
Moves, selects, and sets the menu while the menu is displayed.
Use the multidial to also operate thumbnails, select the multi manual function and select/set the various operation icons.

13 <EXIT> button
Returns to one level higher when the menu is displayed. Pressing the <EXIT> button without confirming the setting value will not reflect the change in the setting.

14 <DISP/MODE CHK> button
Displays/hides information other than the time counter, time stamp, zebra pattern, and marker.
Press and hold the button to display information about the settings of the various shooting functions and information such as a list of the functions assigned to the USER button. Each press of the button toggles the information page in order.

15 <AUTO/MANUAL> switch
Selects the method to adjust the focus, gain, iris, white balance, and shutter speed at shooting. You can set the function to assign to <AUTO> in the [CAMERA] menu → [AUTO SW].
<AUTO>: Adjusts automatically. (Auto mode)
<MANU>: Adjusts manually. (Manual mode)

16 <SLOT SEL> button/<USER 5> button
Selects the card slot to record to or play back from.
This is also used as the USER button (USER5).

17 Rear tally lamp
Illuminates when the recording is started. Flashes when the battery level becomes low.
Whether or not to illuminate the lamp can be set in the menu.

18 <ND FILTER> switch
Selects the ND filter to suit the illumination of the subject.
<CLR>: Does not use the ND filter.
<1/4>: Reduces the amount of light entering the MOS sensor to 1/4.
<1/16>: Reduces the amount of light entering the MOS sensor to 1/16.
<1/64>: Reduces the amount of light entering the MOS sensor to 1/64.

19 <IRIS> button
Selects the method for adjustment of the lens iris.

20 <FOCUS> switch
Select the focus function.
<A>: Changes to the auto focus mode. The auto focus mode adjusts the focus automatically.
<M>: Changes to the manual focus mode. Control the focus ring manually to adjust the focus.
<∞>: Changes to the manual focus mode after the focus distance is set to infinity.
The <FOCUS> switch is a spring switch. The switch returns to the <M> position even when pushed towards the <∞> side.

21 <PUSH AUTO> button
Performs automatic focusing while pressing the button during manual focus mode.

22 <FOCUS ASSIST> button
Enables/disables the focus assist function which is set in the [VIDEO OUT/LCD/VF] menu → [FOCUS ASSIST] → [FOCUS ASSIST SW].

23 <O.I.S.>/<USER 1> button
Enables/disables the optical image stabilizer function.
This is also used as the USER button (USER1).

24 <ZEBRA>/<USER 2> button
Displays/hides zebra patterns.
This is also used as the USER button (USER2).

25 <WFM>/<USER 3> button
Displays/hides the waveform monitor displayed on the LCD monitor.
This is also used as the USER button (USER3).

26 <A.IRIS.LEVEL>/<USER 4> button
Enables/disables the auto iris level function.
Set the target value of the auto iris level in the [SCENE FILE] menu → [A.IRIS LEVEL EFFECT].
This is also used as the USER button (USER4).

27 <INPUT1> switch
Switches audio input signals connected to the <AUDIO INPUT 1> terminal.
<LINE>: Select when audio equipment is connected by the line input.
<MIC>: Select when the external microphone is connected.
<+48V>: Select when the external microphone is connected and the microphone needs a power supply.

28 <INPUT2> switch
Switches audio input signals connected to the <AUDIO INPUT 2> terminal.
<LINE>: Select when audio equipment is connected by the line input.
<MIC>: Select when the external microphone is connected.
<+48V>: Select when the external microphone is connected and the microphone needs a power supply.

29 <AUDIO LEVEL CH1> dial
Adjust the recording level of audio channel 1.

30 <AUDIO LEVEL CH2> dial
Adjust the recording level of audio channel 2.

31 <CH1 SELECT> switch
Selects the audio to be recorded on audio channel 1.
<INT(L)>: Records the left audio of the built-in microphone.
<INPUT1>: Records input signals from the <AUDIO INPUT 1> terminal.
<INPUT2>: Records input signals from the <AUDIO INPUT 2> terminal.

32 <CH2 SELECT> switch
Selects the audio to be recorded on audio channel 2.
<INT(R)>: Records the right audio of the built-in microphone.
<INPUT1>: Records input signals from the <AUDIO INPUT 1> terminal.
<INPUT2>: Records input signals from the <AUDIO INPUT 2> terminal.

Front side

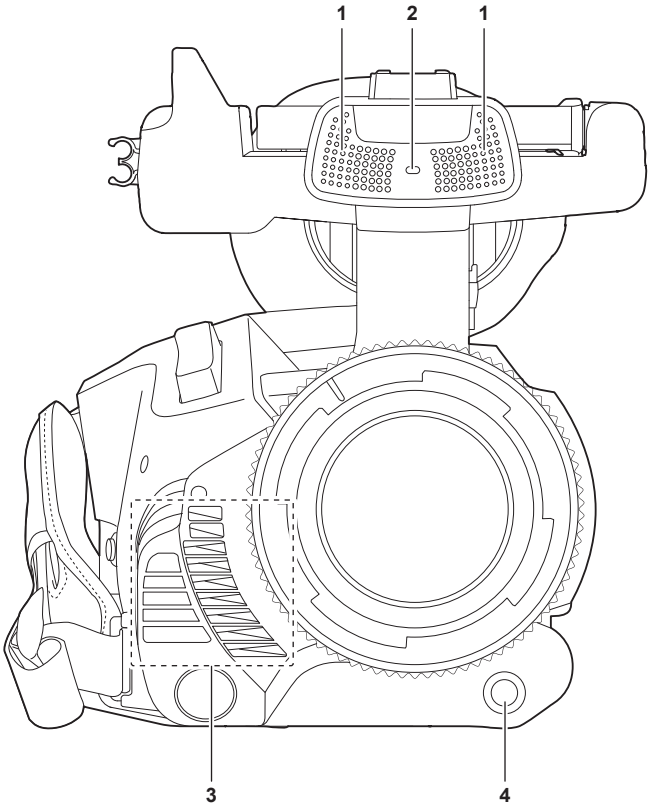

1 Built-in microphone
This is the built-in stereo microphone <L>/<R>.

2 Front tally lamp
Illuminates when the recording is started. Flashes when the battery level becomes low.
Whether or not to illuminate the lamp can be set in the menu.

3 Fan outlet
Fan outlet for cooling fan. Do not block this while the camera is being used.

4 <AWB>/<USER 7> button
Adjusts the white balance. Press it for two seconds or more to adjust the white balance and then black balance.
This is also used as the USER button (USER7).

Rear side

Following terminals, card slots, and card access lamps are inside each cover.

- <USB3.0 DEVICE> terminal
- <AV OUT> terminal
- <REMOTE> terminal
- <LAN> terminal
- <HDMI> terminal
- <DC IN 12V> terminal

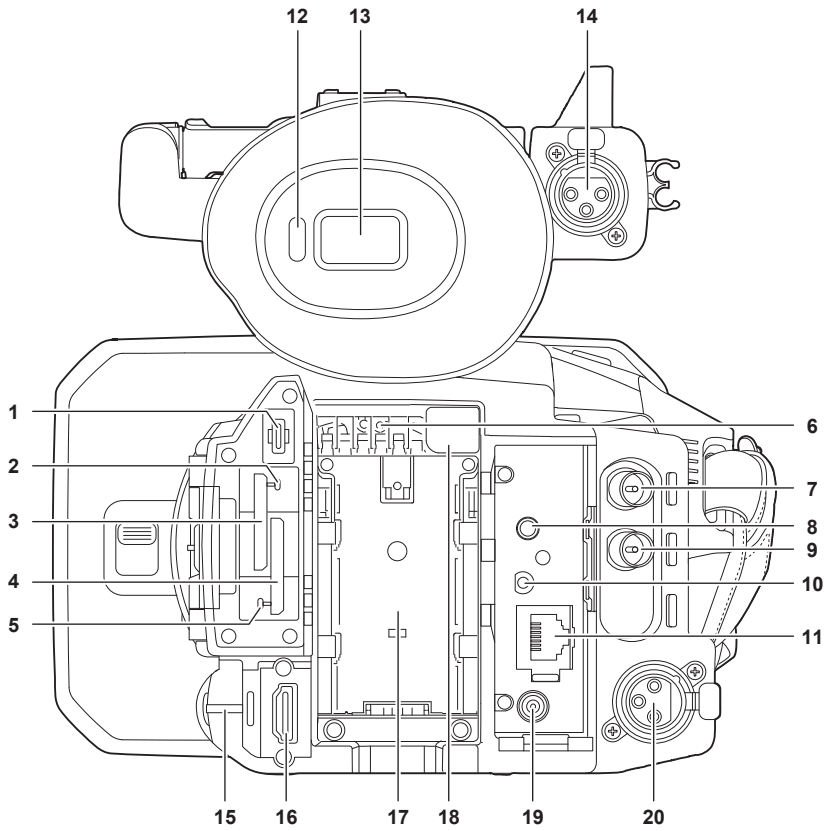

1 <USB3.0 DEVICE> terminal
Connect to a computer with the USB type C cable to transfer data.

2 Card 1 access lamp
Indicates the access status for recording and playback of the memory card inserted in card slot 1.
Whether or not to illuminate the lamp can be set in the menu.

3 Card slot 1
A slot for the memory card.

4 Card slot 2
A slot for the memory card.

5 Card 2 access lamp
Indicates the access status for recording and playback of the memory card inserted in card slot 2.
Whether or not to illuminate the lamp can be set in the menu.

6 Fan inlet
Fan inlet for cooling fan. Do not block this while the camera is being used.

7 <SDI OUT> terminal
A terminal to output SDI signal by connecting a monitor, etc.

8 <AV OUT> terminal
This is the output terminal for the video and audio of an external monitor.

9 <TC IN/OUT> terminal
Connects to an external equipment and output/input a time code.
Inputs the standard time code when locking the time code with an external equipment.
Input and output are set in the [RECORDING] menu → [TC/UB] → [TC IN/OUT SEL].

10 <REMOTE> terminal
Connects the remote control unit (optional) to control some functions remotely.

11 <LAN> terminal
Connects the LAN cable.

12 Eye sensor
Screen is displayed on the viewfinder when an eye is brought close.

13 Viewfinder

14 <AUDIO INPUT 1> terminal (XLR, 3-pin)
Connects an audio equipment or an external microphone.

15 Rear tally lamp
Illuminates when the recording is started. Flashes when the battery level becomes low.
Whether or not to illuminate the lamp can be set in the menu.

16 <HDMI> terminal
A terminal to output video signal by connecting a monitor, etc.

17 Battery mounting section
Mounts a battery.

18 Battery release button
Used when removing the battery from the camera.

19 <DC IN 12V> terminal
Connects the supplied AC adaptor and supplies an external power.

20 <AUDIO INPUT 2> terminal (XLR, 3-pin)
Connects an audio equipment or an external microphone.

Top side

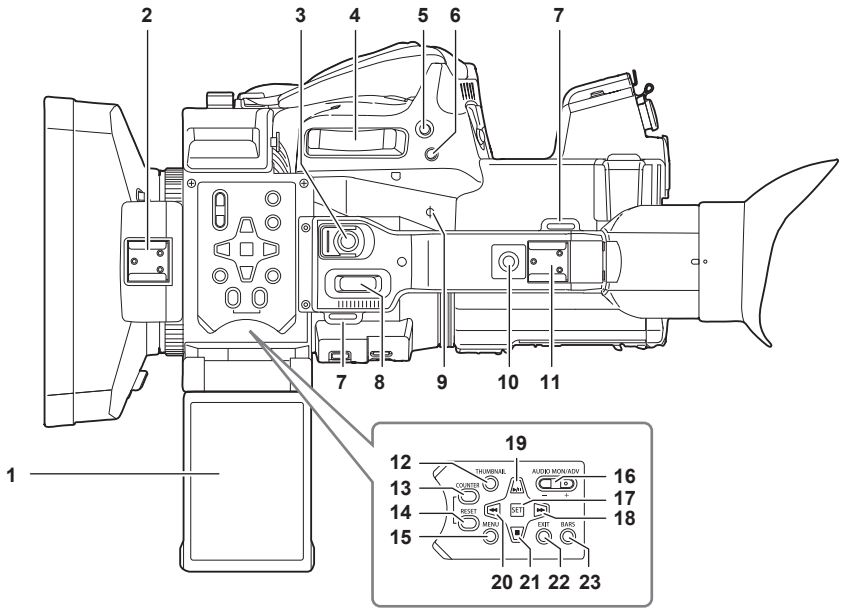

1 LCD monitor

2 Light shoe
Attaches the video light, etc.

3 REC button (on the handle)
Starts or stops the recording.
This includes hold mechanism.

4 Zoom lever (on the grip)
Adjusts the zoom of an image.
<T>: Zooms in the image.
<W>: Zooms out the image.

5 <IRIS>/<USER 6> button
Selects the method for adjustment of the lens iris.
This is also used as the USER button (USER6).

6 <REC CHECK> button
Press this button while recording is suspended to play back the last three seconds of video or audio of the clip that was just shot.

7 Shoulder strap mounting section
Mounts the supplied shoulder strap. (page 32)

8 Zoom lever (on the handle)
Adjust the zoom of an image.
<T>: Zooms in the image.
<W>: Zooms out the image.

9 Focal plane index <ϕ>
Indicates the focal plane of the MOS sensor. It provides a reference for measuring the accurate focal distance from the subject.

10 Handle mounting holes
Mounts the handle.
- Mounting hole size
  - 1/4-20 UNC (screw length 5.5 mm or shorter)

11 Accessory shoe
Attaches the video light.

12 <THUMBNAIL> button
Press this button to display the thumbnail screen on the LCD monitor and viewfinder. Press it again to return to the regular display.

13 <COUNTER> button
Switches the display item of the counter.

14 <RESET> button
Resets the time counter or clears the input value in the keyboard screen.

15 <MENU> button
Displays the menu. Pressing the <MENU> button while the menu is displayed closes the menu. Press it while the thumbnail is displayed to display the operation screen of the thumbnail menu, and clips can be deleted.

16 <AUDIO MON/ADV> button
Adjusts the volume of the monitor audio during playback, recording, and recording standby.
<+>: Increases the volume of the monitor audio. When pressing during pause, frame-by-frame play is performed.
<–>: Decreases the volume of the monitor audio. When pressing during pause, frame-by-frame rewind is performed.

17 <SET> button
Performs operations of the settings menu and thumbnails.

18 <▶▶> button
Performs operations of the settings menu and thumbnails.
Press this button during playback to perform fast-forward playback.
Press this button while playback is paused to skip to the beginning of the next clip.

19 <▶/❚❚> button
Performs operations of the settings menu and thumbnails.
Press this button to view playback images.
Press this button during playback to pause playback.
Press this button to resume playback during a pause, fast-forward playback, or fast-reverse playback.

20 <◀◀> button
Performs operations of the settings menu and thumbnails.
Press this button during playback to fast-reverse playback.
Press this button while playback is paused to skip to the beginning of the clip.

21 <■> button
Performs operations of the settings menu and thumbnails.
Press this button to stop playback when a clip is playing.

22 <EXIT> button
Returns to one level higher when the menu is displayed. Pressing the <EXIT> button without confirming the setting value will not reflect the change in the setting.

23 <BARS> button
Switches on/off the color bar. The color bar is interlocked with the test tone (1 kHz).

Basic operation

Multidial operation

Operate the multidial on the camera by turning it in vertical direction or pushing it.

- Turning the multidial in vertical direction will move the cursor.
  The cursor can also be moved by pressing the <◀◀> button, <■> button, <▶▶> button, and <▶/❚❚> button.
- Pressing the multidial will select or confirm the item with cursor.
  Selection and confirmation are also available by pressing the <SET> button.
- Values of the menu or the pages of the thumbnail screen can be changed continuously by pressing and turning the multidial vertically to fix the setting.
  Values of the menu or the pages of the thumbnail screen can be changed continuously even by pressing and holding the <◀◀> button, <■> button, <▶▶> button, and <▶/❚❚> button.

NOTE

- For details about operating the menu, refer to “When operating with the multidial” (page 63).

Touch operation of the LCD monitor

The LCD monitor can be operated by directly touching with a finger.
Do not touch the LCD monitor with a pointed hard object such as a ball point pen.

■ Touching

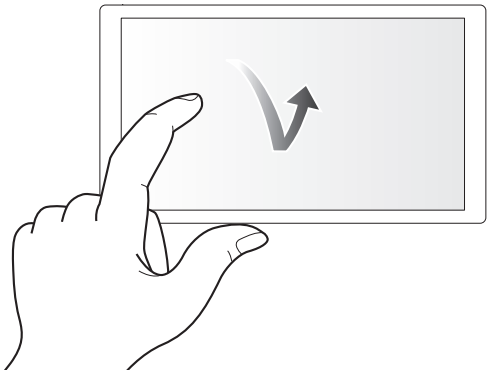

An operation to press and release the LCD monitor. An item or icon can be selected, or an item can be executed.

- To select an icon, touch the center of the icon.
- It will not operate while touching a different location of the LCD monitor.

■ Sliding

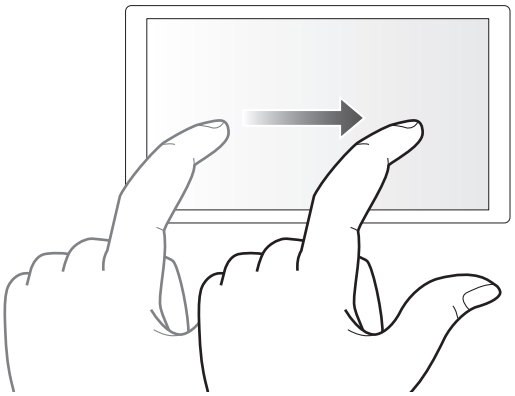

An operation to move a finger while touching the LCD monitor. Playback operation such as the skip playback or direct playback, etc. can be performed.

■ Touching and holding

An operation to keep on pressing, then releasing the LCD monitor. Values of the menu or the pages of the thumbnail screen can be changed continuously.

NOTE

- For details about operating the menu, refer to “When operating by touching the LCD monitor” (page 64).

Chapter 3 Preparation

Before you use the camera, mount the battery following the procedures in this chapter. The mounting of accessories is also described in this chapter.

Power supply

A battery or the supplied AC adaptor can be used as the power supply for the camera.

- The camera is compatible to following batteries. (As of April 2024)
  - AG-VBR59 (supplied/optional, supports quick charging)
  - AG-VBR89 (optional, supports quick charging)
  - AG-VBR118 (optional, supports quick charging)
  - VW-VBD58 (optional)

Charging the battery

The battery is not charged at the time of purchase. Fully charge the battery in the battery charger before using the battery.

It is recommended that you have one extra battery.

- It is recommended to perform charging of the batter in a location with ambient temperature of 10 °C to 30 °C (same for the battery temperature).
- The supplied AC cable is dedicated for this camera. Do not use with any other device. Also, do not use AC cable from other device on this camera.
- The supplied battery charger can simultaneously charge two batteries. Also, it is compatible with the quick charge battery.

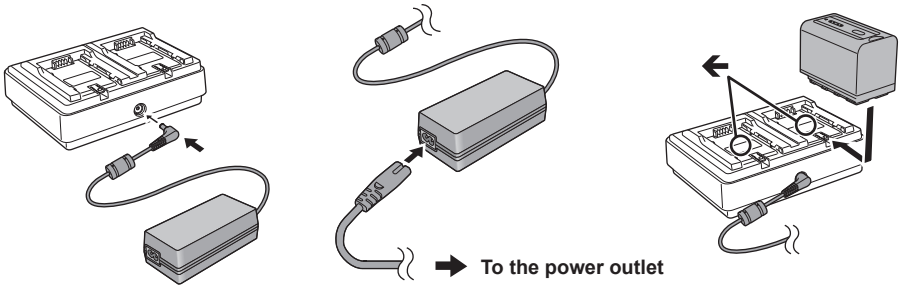

Fig. 1 Fig. 2 Fig. 3

1 Connect the DC plug of the AC adaptor to the <DC IN 12V> terminal of the battery charger. (Fig. 1)

2 Connect the AC cable to the AC adaptor. (Fig. 2)

- Insert the AC cable all the way in until it stops.

3 Connect the power plug to the power outlet. (Fig. 2)

4 Mount the battery to the battery charger. (Fig. 3)

The charging lamp of the side the mounted battery will illuminate, and the charging will start.

- Place the battery horizontally along the ← mark, and slide it.
- Once the charging is completed, the <CHARGE1>/<CHARGE2> lamp (charging lamp) will turn off. Slide the battery and remove it.

■ Display of the <CHARGE1>/<CHARGE2> lamp

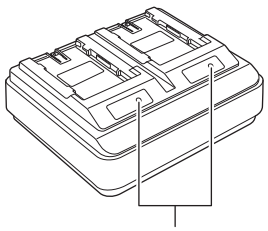

<CHARGE1>/<CHARGE2> lamp

The <CHARGE1>/<CHARGE2> lamp (charging lamp) of the supplied battery charger indicates the charging status as follows.

Display of the <CHARGE1>/<CHARGE2> lamp	Charging status
Green (illuminated)	Quick charging
Orange (illuminated)	Normal charging
Orange (flashing)	Stopped charging due to an error
Off	Charging is completed or the battery is not mounted

NOTE

- The battery charger will determine the status of the battery after the battery is mounted. Therefore, it may take some time until the charging lamp is to illuminate. Mount the battery again if the charging lamp does not illuminate after ten seconds or longer has elapsed.
- When two quick charging compatible batteries are mounted, the quick charging on the <CHARGE1> side will take priority, and the charging on the <CHARGE2> side will be normal charging. Once the charging of the <CHARGE1> side proceeds, the charging on the <CHARGE2> side will switch to quick charging.
  Also, depending on the charging status of the battery, the indicator on the battery that is mounted on the <CHARGE2> side may turn off.
- The battery charger will perform optimal charging after determining the status of the battery. Once the charging is started, the indicator for quick charging compatible battery will flash. Also, if it is charging on both <CHARGE1> side and <CHARGE2> side, charging of both batteries will stop when either one of the battery is mounted/removed, or replaced. It will start the charging again after determining the status of the batteries.
- Mount the battery to be charged prioritized on the <CHARGE1> side when charging.

Standard charging time and recordable time

Battery parts number	Voltage/capacity (minimum)	Charging time	Continuous recordable time
AG-VBR59 (supplied/optional)	7.28 V/5900 mAh	Approx. 3 hours 20 minutes	Approx. 3 hours 20 minutes
AG-VBR89 (optional)	7.28 V/8850 mAh	Approx. 4 hours	Approx. 5 hours
AG-VBR118 (optional)	7.28 V/11800 mAh	Approx. 4 hours 40 minutes	Approx. 6 hours 40 minutes
VW-VBD58 (optional)	7.2 V/5800 mAh	Approx. 5 hours 20 minutes	Approx. 3 hours 10 minutes

- The charging time is the time when charged using the supplied battery charger.
- The charging time is the time when the operating ambient temperature is 25 °C and operating relative humidity is 60%. At other temperature and humidity the charging time may take longer.
- The charging time is the time to charge when the charging capacity of the battery is used up. The charging time or the continuous recordable time differs depending on the use condition such as high or low temperature.
- Continuous recordable time is the time when the camera is used fulfilling all of the following conditions. If you use the camera in other conditions, continuous recordable time will shorten.
  - When the menu settings as the factory settings (when [REC FORMAT] is set to [1080-59.94i/422ALL-I 100M]/[1080-50.00i/422ALL-I 100M]) is set
  - When the LCD monitor is used and cable is not connected to the external input/output terminal

NOTE

- Battery is warm after using or after charging, but this is not a malfunction.
- The battery can be charged with the battery charger AG-B23 (DE-A88) (optional), but it will take longer to charge.

Checking the remaining battery level

The remaining battery level can be checked with the power status display on the LCD monitor or the indicator on the supplied battery.

Checking the remaining battery level with the LCD monitor

The battery status display will change as → → → → → while the remaining battery level gets lower. It will flash in red when the remaining battery level is zero.

NOTE

- The power status display may not be displayed depending on the setting in the menu.
- Repair or copy of the clip, or update of the firmware is not possible when it is flashing in red.

Checking the remaining battery level with the battery

- The remaining battery level can be checked with the indicator display by pressing the <CHECK> button on the battery when it is not charging.
  - The remaining battery level is a rough indication.
  - The indicator will not illuminate even if the <CHECK> button is pressed when the remaining battery level is zero. Charge the battery.
- The progress of the charging is notified by the flashing position of the indicator while the battery is charging.
  Once the charging is completed, the indicator turns off.

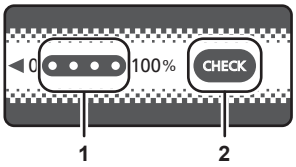

1 Indicator

2 <CHECK> button

■ Display of the indicator

- The color and illuminate/flashing status of the indicator indicated by the icon in the table are as follows.
  - : Flashing in green
  - ◯: Illuminated in green
  - ●: Off

Indicator display		Remaining battery level/charging progress
When checking the remaining battery level	Charging	
		0% - 25%
		25% - 50%
		50% - 75%
		75% - 100%

- Display of the indicator is a rough indication. If the battery is mounted to the camera or the battery charger, check the remaining level on the device the battery is mounted to. The remaining level may differ from the one displayed with the indicator on the battery.

Attaching and removing the battery

Attaching the battery

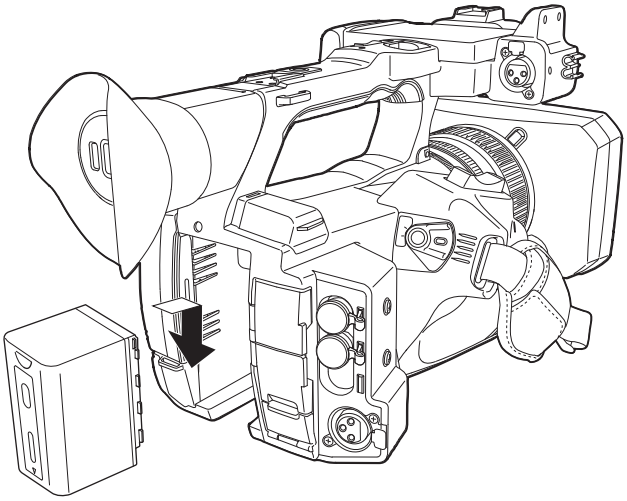

1 Press the battery against the battery mounting section of the camera, and mount it by sliding it downward.

- Press in the battery until it clicks and gets locked.

Removing the battery

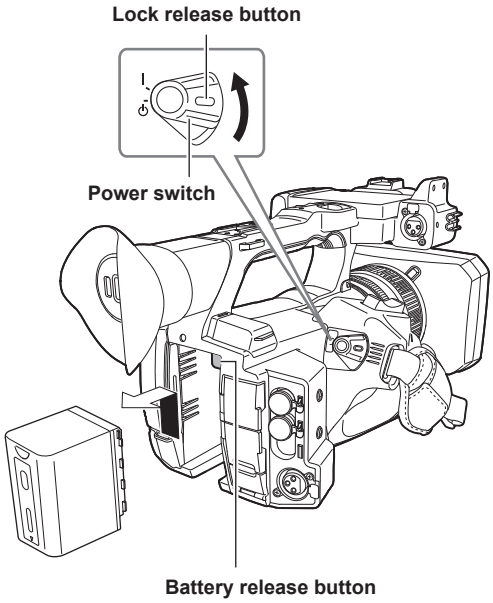

1 Align the power switch to < ⏻ > (standby) while holding down the lock release button.

Make sure that the LCD monitor has gone off.

2 While pressing the battery release button on the camera, slide the battery upward and remove it.

Using the AC adaptor

Attaching the AC adaptor

Use the supplied AC adaptor. Do not use an AC adaptor for other device.
The supplied AC cable is dedicated for this camera. Do not use with any other device. Also, do not use AC cable from other device on this camera.

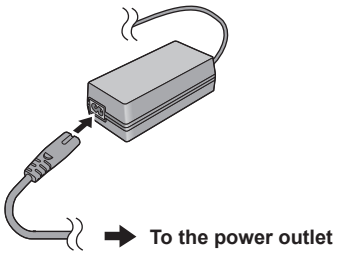

Fig. 1

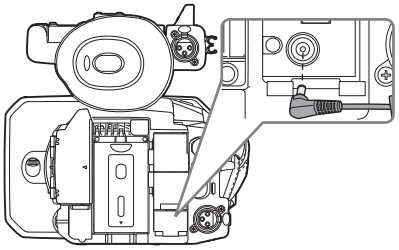

Fig. 2

1 Connect the AC cable to the AC adaptor. (Fig. 1)

- Insert the AC cable all the way in until it stops.

2 Connect the power plug to the power outlet. (Fig. 1)

3 Connect the AC adaptor to the <DC IN 12V> terminal. (Fig. 2)

- When removing the AC adaptor, always set the power switch to < ⏻ > (standby), and check that the LCD monitor is turned off before removing.

NOTE

- To record with the AC adaptor connected, mount the battery in case there is a power outage or disconnection of the power outlet.
- The power is consumed even when the power switch is set to < ⏻ > (standby). To prevent power consumption, disconnect the AC adaptor from the power outlet when it is not used for a long period of time.
- The battery charger and the AC adaptor is designed to operate regardless of the country or region in use. This operates with power supply voltage of 100 V-240 V, and power supply frequency of 50 Hz or 60 Hz. However, the shape of the power outlet differs depending on the country or the region. Prepare a plug that fits the shape of the power outlet. Consult the dealer for conversion plug.

Mounting accessories

Adjusting the grip belt

- Adjust the grip belt so that it fits the size of your hand.
- The grip belt is already mounted to the camera.
- If the buckle is difficult to tighten, move the pad forward and tighten the buckle again.

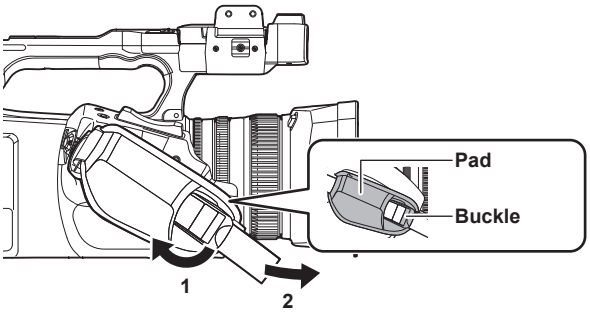

1 **Open the buckle section.**

2 **Pull the end of the belt.**

Attaching the shoulder strap

Mount the supplied shoulder strap to the shoulder strap mounting section.

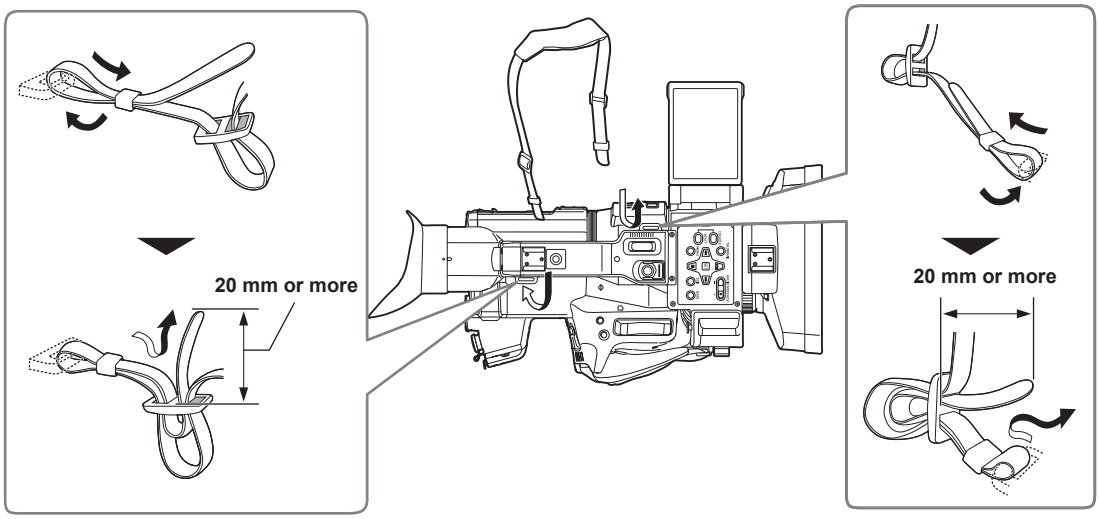

NOTE

- Make sure that the shoulder strap is securely attached.

Mounting the lens hood

Removing

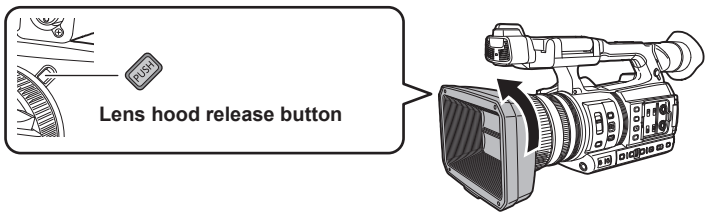

1 **While pressing the lens hood release button, turn the lens hood in the direction of the arrow to remove it.**

Mounting

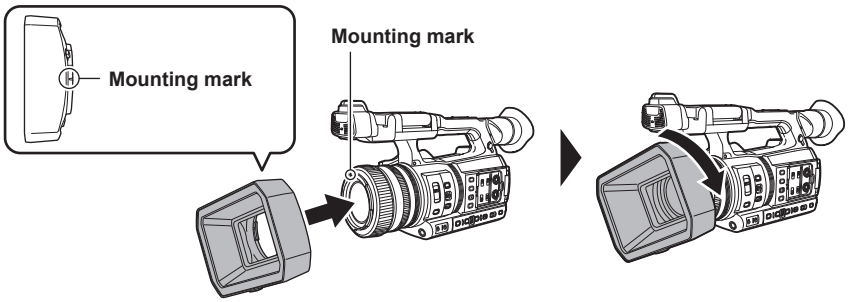

1 Insert the lens hood into the camera.

- Align the mounting marks on the lens hood and camera.

2 Turn the lens hood clockwise.

- Turn until the lens clicks and locks into place.

Opening and closing the lens cover

Use the lens cover open/close lever to open and close the lens cover.
Open the lens cover when shooting.
When not using the camera, close the lens cover in order to protect the lens.

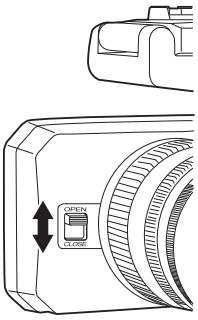

NOTE

- Do not press the lens cover with force. Doing so may damage the lens and lens cover.
- The lens cover may not open and close or the lens hood may not mount depending on the various filters and MC protectors mounted to the front lens of the camera.

Mounting the eye cup

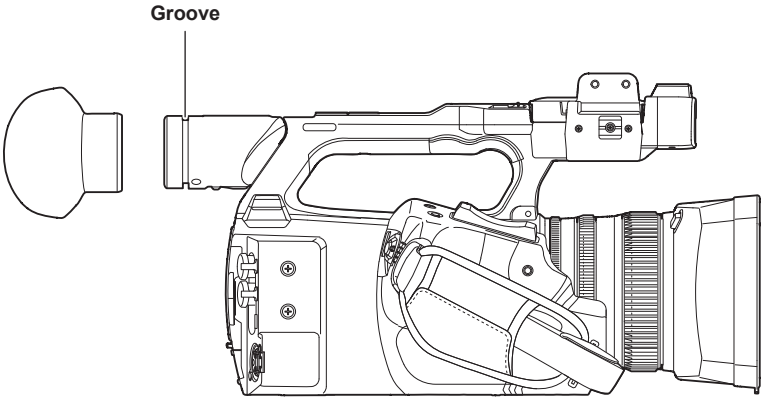

1 Attach the eye cup by aligning the groove on the attaching part of the eye cup with the inner ridge of the eye cup.

Mounting the external microphone

External microphone such as the super-directional microphone AG-MC200G (optional) can be mounted onto the handle.

Screws are attached on the camera body in advance to protect the screw holes. Remove those screws when you attach the microphone holder.

- The microphone holder cannot be mounted with the screws originally attached to the camera. Use the supplied microphone holder screws.

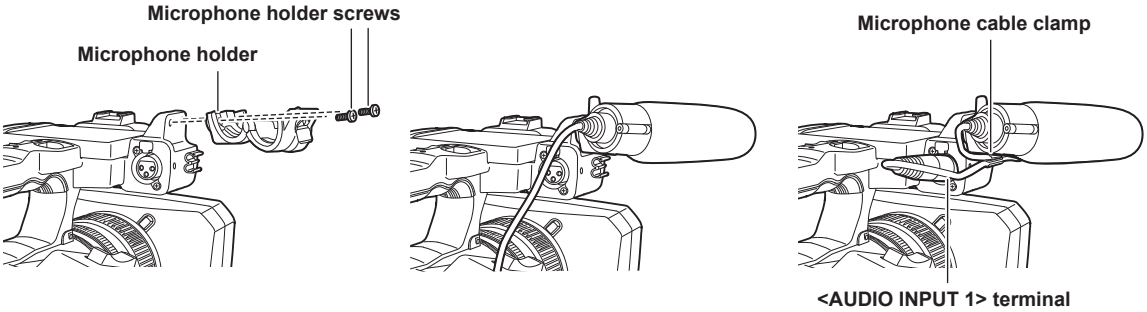

Fig. 1 Fig. 2 Fig. 3

1 Mount the supplied microphone holder to the microphone holder mounting section using the microphone holder screws (x 2). (Fig. 1)

2 Mount the external microphone and tighten the microphone holder screws. (Fig. 2)

3 Connect the microphone cable to the <AUDIO INPUT 1> terminal. (Fig. 3)

4 Attach the microphone cable to the microphone cable clamp.

Toggle the <INPUT1> switch to match the microphone to be connected.

NOTE

- Remove the microphone cable from the <AUDIO INPUT 1> terminal while pushing the lever.

Attaching a tripod

The tripod attachment holes accept 1/4-20 UNC and 3/8-16 UNC screws. Use the hole that matches the diameter of the clamping screw on the tripod.

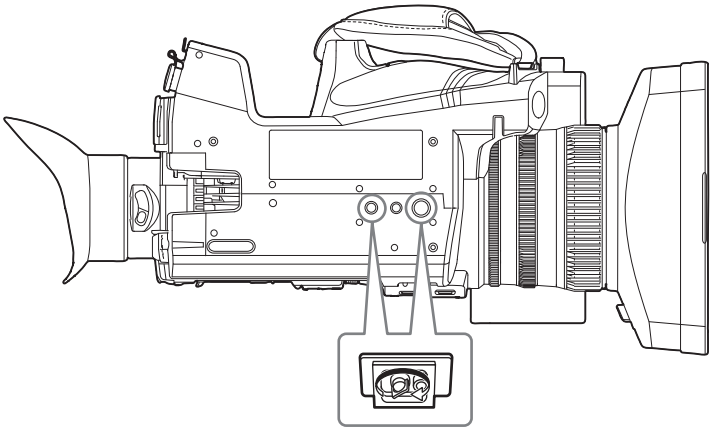

NOTE

- Use a tripod in safe locations.
- The depth of the tripod attachment hole is 5.5 mm. Do not over-tighten the tripod screw when mounting the camera to a tripod.

Mounting accessories

You can mount and use equipment you have.

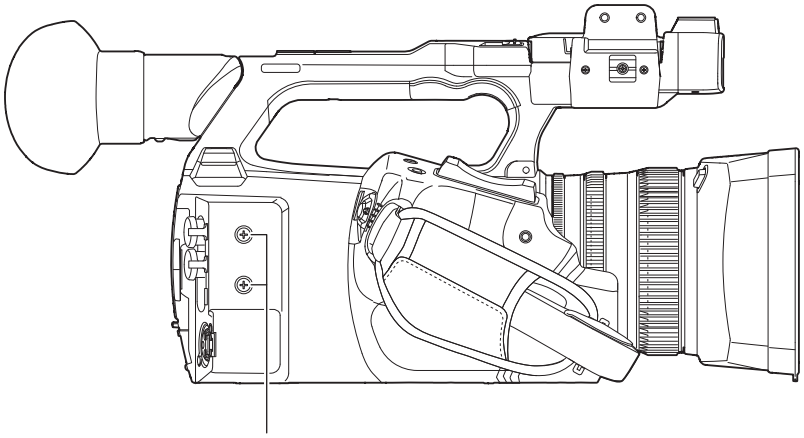

- The mounting screw size is M3.
- The mounting hole depth is 6 mm.
  Do not over-tighten the screws when mounting accessories to the camera.

Turning on/off the power

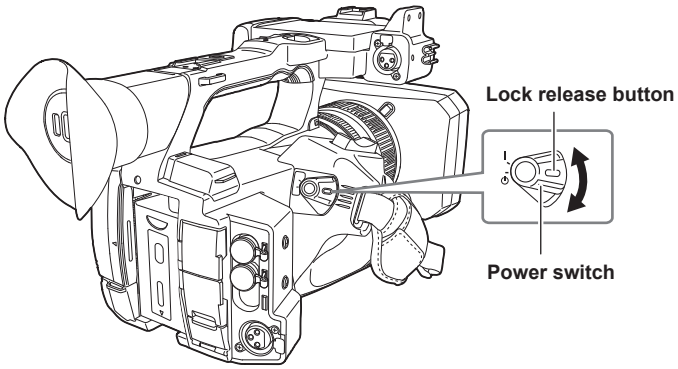

How to turn on the power

1 Align the power switch to < | > (ON) while holding down the lock release button.

The LCD monitor lights up.

- The [TIME ZONE] screen, and then the [CLOCK SETTING] screen are displayed in sequence when the power is turned on for the first time.
  Set the time zone, date, and time.

NOTE

- The built-in battery (rechargeable battery) will discharge. The setting for date/time may be initialized when the camera is not turned on for approximately four months.
  Set the date/time again after charging the built-in battery. (page 37)

How to turn off the power

1 Align the power switch to < ⏻ > (standby) while holding down the lock release button.

The LCD monitor goes off.

Charging the built-in battery

The date/time set in the camera is maintained by the built-in battery.

The built-in battery has been exhausted if [BACKUP BATT EMPTY] is displayed in the viewfinder or LCD monitor for approximately five seconds when the power of the camera has not been turned on for a while, and then the power switch is set to < ❙ > (ON).

The date of the internal clock of the camera resets to January 1, 2019 if the built-in battery is exhausted.

Charge the built-in battery with the following procedure.

1 Set the power switch to < ⏻ > (standby).

2 Connect a fully charged battery or the AC adaptor to the camera.

For details about the connection of the battery or AC adaptor, refer to “Power supply” (page 28).

3 Leave the camera for approximately 24 hours.

The built-in battery will be charged.
The built-in battery is charged even when the power switch is set to < ❙ > (ON).
Check the date/time setting and the time code after charging. If [INTERNAL CLOCK HAS RESET] [<PLEASE SET TO CORRECT TIME>] is displayed on the STATUS screen of the mode check, set the date/time of the internal clock. (page 38)

4 Set the power switch to < ❙ > (ON), and check that [BACKUP BATT EMPTY] is not displayed in the LCD monitor.

If [BACKUP BATT EMPTY] is still displayed after charging, the built-in battery needs to be replaced. Consult your dealer.

Setting the date/time of the internal clock

The date/time/time zone are recorded as meta data in the clip while shooting.
This will affect the management of recorded clips, so always check and set the date/time and time zone before using the camera for the first time.
Do not change the setting of the date/time and time zone while shooting.

1 Press the <MENU> button.

The menu is displayed.

2 Select the [OTHERS] menu → [CLOCK] → [TIME ZONE], and set the time difference from Greenwich Mean Time.

3 Select the [OTHERS] menu → [CLOCK] → [CLOCK SETTING], and set the year, month, date, and time.

NOTE

- Accuracy of the clock is approximately ±30 seconds per month. Check and reset the time when accurate time is required.
- In the AVCHD format, clip will be save in +12:30 even selecting +12:45 due to format standards.

■ Time zone table

Time difference	Region	Time difference	Region
00:00	Greenwich	+01:00	Central Europe
–00:30		+01:30	
–01:00	Azores	+02:00	Eastern Europe
–01:30		+02:30	
–02:00	Mid-Atlantic	+03:00	Moscow
–02:30		+03:30	Tehran
–03:00	Buenos Aires	+04:00	Abu Dhabi
–03:30	Newfoundland	+04:30	Kabul
–04:00	Halifax	+05:00	Islamabad
–04:30	Caracas	+05:30	Mumbai
–05:00	New York	+06:00	Dakar
–05:30		+06:30	Yangon
–06:00	Chicago	+07:00	Bangkok
–06:30		+07:30	
–07:00	Denver	+08:00	Beijing
–07:30		+08:30	
–08:00	Los Angeles	+09:00	Tokyo
–08:30		+09:30	Darwin
–09:00	Alaska	+10:00	Guam
–09:30	Marquesas Islands	+10:30	Lord Howe Island
–10:00	Hawaii	+11:00	Solomon Islands
–10:30		+11:30	
–11:00	Midway Islands	+12:00	New Zealand
–11:30		+12:45	Chatham Islands
–12:00	Kwajalein Atoll	+13:00	Phoenix Islands
+00:30			

Preparing the memory card

Memory cards supported by the camera

The following SD cards and microP2 cards can be used with the camera. (As of April 2024)

Type of the SD card	Recording capacity
SDHC memory card	4 GB - 32 GB
SDXC memory card	48 GB - 256 GB

Type of the microP2 card	Recording capacity
microP2 card A series	32 GB, 64 GB
microP2 card B series	64 GB

- The following memory cards cannot be used because they do not comply with the SD standards.
  - A memory card with 4 GB or more without the SDHC logo
  - A memory card with 48 GB or more without the SDXC logo
- Operation of all the above mentioned memory cards are not always assured.
- The camera does not support the CPS (Content Protection System) function of the microP2 card, so a microP2 card formatted with encryption with CPS password cannot be sued. When formatted with the camera, it can be used as a microP2 card that is not encrypted.

Speed Class during shooting

The memory card to use differs depending on the recording mode and the recording format.

Use memory cards compatible with the Speed Class, UHS Speed Class, or Video Speed Class.

The recording may stop suddenly when a memory card not compatible with the required Speed Class is used.

- Speed Class, UHS Speed Class, and Video Speed Class are the speed specification regarding continuous writing. Check the display on the label and other information on the memory card.

■ When the recording mode is P2

SDXC memory cards and microP2 cards can be used.

Recording bit rate or recording function	Speed Class	Example of card display
All	microP2 card A series, microP2 card B series, SDXC memory card (Card that the operation is confirmed by Panasonic is recommended)	micro P2

NOTE

- For details on the SD card that the operation is confirmed, visit the support desk at the following website: https://pro-av.panasonic.net/

■ When the recording mode is MOV

SDXC memory cards and 64 GB microP2 cards can be used.

SDHC memory cards and 32 GB microP2 cards cannot be used.

Recording bit rate or recording function	Speed Class	Example of card display
400 Mbps	Video Speed Class V60 or higher Or the microP2 card B series	V60
FHD VFR (23.98p)/SUPER SLOW ALL-I (Variable frame rate recording/super slow recording)		
200 Mbps	Video Speed Class V30 or higher, UHS Speed Class 3 or higher Or the microP2 card A series, microP2 card B series	V30 3
150 Mbps		
100 Mbps		
FHD VFR/SUPER SLOW LongGOP (Variable frame rate recording/super slow recording)		
FHD VFR (59.94p/50.00p/29.97p/25.00p) ALL-I (Variable frame rate recording)		
50 Mbps	Video Speed Class V10 or higher, UHS Speed Class 1 or higher, Speed Class 10 or higher Or the microP2 card A series, microP2 card B series	V10 1 CLASS 10 10

■ When the recording mode is AVCHD

SDHC memory cards, SDXC memory cards and microP2 cards can be used.

Recording bit rate or recording function	Speed Class	Example of card display
All	Speed Class 4 or higher Or the microP2 card A series, microP2 card B series	CLASS 4 4

Preventing unintentional erasing

Writing, erasing and formatting data is prohibited by setting the write-protection switch of the memory card to the LOCK side.

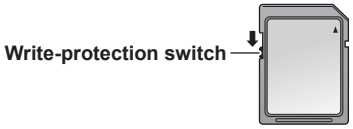

Status of the card access lamp and memory card

Card access lamp	Memory card status	
Orange (illuminated)	Recording target	Both loading/writing are permitted. Current recording target.
Green (illuminated)	Recording possible	Both loading/writing are permitted.
Orange (flashing)	Accessing card	Loading/writing are currently being performed.
Orange (rapidly flashing)	Recognizing memory card	The memory card is being recognized.
	Error	An error has occurred. This will flash even if the memory card is not inserted when an error has occurred.
Green (slowly flashing)	No remaining recording capacity	No recording capacity left on the memory card. Only loading is possible.
	Write-protected	The write-protection switch of the memory card is set to the LOCK side.
	Recording not possible	It cannot record with the recording format that is currently set. Change the recording format or use a memory card compatible with the recording format to record.
Off	No memory card inserted	A memory card has not been inserted.
	Illegal format	It is not the correct format. Reformat the card.
	Card not supported	This is a card that cannot be used with the camera, such as MMC (Multi Media Card).
	Setting to [NETWORK] menu → [NETWORK FUNC] → [NDI|HX]	Cannot record and play back. The functions other than recording and playback (loading of the scene file, etc.) can be used.
	microP2 card formatted with encryption with CPS password	Cannot be used with the camera. When formatted with the camera, it can be used as a microP2 card that is not encrypted.
	During card reader mode	The card 1 access lamp/card 2 access lamp turns off when not accessing.

NOTE

- The card access lamp will not illuminate or flash when the [OTHERS] menu → [LED] → [ACCESS LED] → [OFF] is set.

Inserting/removing the memory card

Inserting the memory card

The memory card to use with the camera should always be formatted on the camera. (page 41)

- Formatting the memory card will erase all of the recorded data which cannot be restored.

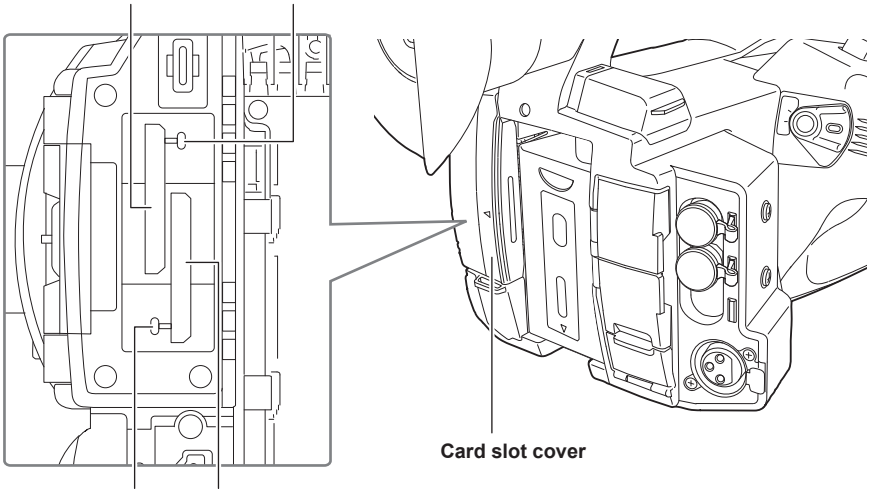

1 Open the card slot cover.

2 Insert the memory card into the card slot.

- Card slot 1 and card slot 2 can each insert one memory card.
- Insert straight in with the label facing left until it clicks.
  Do not force or apply excess force when inserting the memory card.

3 Close the card slot cover.

Removing the memory card

1 Open the card slot cover.

- Confirm that the card access lamp is not flashing in orange.
- Data is being written/loaded when the card access lamp is flashing in orange, so do not remove the memory card.

2 Press in the memory card further into the camera and let go.

- Pull the memory card straight out when it is released from from the card slot.

3 Close the card slot cover.

Cautions when using or storing

- Do not touch the connecting terminal section at the rear of the memory card.
- Avoid high temperature and humidity.
- Avoid water droplets.
- Avoid charging with electricity.

Use or store the memory card with the card inserted into the camera and with the slot cover closed.

Formatting the memory card

1 Select the [RECORDING] menu → [FORMAT MEDIA] → [SLOT1]/[SLOT2].

2 When the confirmation message is displayed, select [SET].

3 When the completion message is displayed, select ↩.

NOTE

- This function can be operated also by touching the LCD monitor.
- It may take few seconds after closing the completion message until it can record.
- The formatting may fail when the upload function is in operation.

Recording time of the memory card

When the recording mode is P2

SDHC memory cards, SDXC memory cards and microP2 cards can be used.

Recording format	Recording capacity	
	64 GB	64 GB (during proxy recording)
AVC-Intra 422 AVC-Intra 200 AVC-Intra 100 (1080-59.94p/50.00p)	Approx. 32 minutes	Approx. 30 minutes
AVC-Intra 100 (1080-59.94i/50.00i, 720-59.94p/50.00p)	Approx. 64 minutes	Approx. 60 minutes
AVC-Intra 50	Approx. 128 minutes	Approx. 114 minutes
AVC-LongG50	Approx. 128 minutes	Approx. 114 minutes
AVC-LongG25 (1080-59.94p/50.00p)	Approx. 128 minutes	Approx. 114 minutes
AVC-LongG25 (1080-59.94i/50.00i, 720-59.94p/50.00p)	Approx. 256 minutes	Approx. 206 minutes
AVC-LongG12 (1080-59.94p/50.00p)	Approx. 240 minutes	—
AVC-LongG12 (1080-59.94i/50.00i, 720-59.94p/50.00p)	Approx. 480 minutes	—

NOTE

- For details on the SD card that the operation is confirmed, visit the support desk at the following website:
  https://pro-av.panasonic.net/
- The clip in P2 format data is split every 4 GB when [SPLIT] is selected in the [RECORDING] menu → [FILE SPLIT].
  Also, it is split approximately every 128 seconds if [SHORT SPLIT] is selected in the [RECORDING] menu → [FILE SPLIT].
  However, when recording to a memory card exceeding 32 GB in AVC-Intra 422/AVC-LongG50/AVC-LongG25/AVC-LongG12 formats, recording can be continued as a same clip by selecting [ONE FILE] in the [RECORDING] menu → [FILE SPLIT]. Clip is split approximately every three hours when recording format is AVC-Intra 422. Clip is split approximately every three hours or approximately every 64 GB when recording format is AVC-LongG50/AVC-LongG25/AVC-LongG12.
  These split clips are displayed as one clip in the thumbnail screen.
  These may be displayed as separate clips in the nonlinear editing software or a computer.
- The recording is stopped once when the recording time reaches ten hours, and recording is automatically resumed after few seconds. Image and audio during the pause will not be recorded. This includes the case of special recording, such as relay recording.
- In the interval recording, the recording is stopped once when the length of a clip reaches ten hours, and recording is automatically resumed after few seconds.

When the recording mode is MOV

SDXC memory cards and 64 GB microP2 cards can be used. SDHC memory cards and 32 GB microP2 cards can not be used.

Recording format	Recording rate	Recording capacity	
		64 GB	128 GB
UHD	400 Mbps	Approx. 20 minutes	Approx. 40 minutes
	200 Mbps	Approx. 40 minutes	Approx. 1 hour 20 minutes
	150 Mbps	Approx. 55 minutes	Approx. 1 hour 50 minutes
	100 Mbps	Approx. 1 hour 20 minutes	Approx. 2 hours 40 minutes
FHD	200 Mbps	Approx. 40 minutes	Approx. 1 hour 20 minutes
	100 Mbps	Approx. 1 hour 20 minutes	Approx. 2 hours 40 minutes
	50 Mbps	Approx. 2 hours 40 minutes	Approx. 5 hours 20 minutes

NOTE

- The recording time will change depending on the variable frame rate set in the variable frame rate recording or the super slow recording.
- File is split approximately every three hours for the data in MOV format.
  These are displayed as separate clips in the thumbnail screen. In addition, the clips recorded across two memory cards using the relay recording are displayed as separate clips.
- The recording is stopped once when the recording time reaches ten hours, and recording is automatically resumed after few seconds. Image and audio during the pause will not be recorded. This includes the case of special recording, such as variable frame rate recording, super slow recording or relay recording.
  When performing high-speed shooting with the variable frame rate recording or super slow recording, the recording time will be shorter than 10 hours depending on the ratio of the frame rate of the recording format and the variable frame rate.
- In the interval recording, the recording is stopped once when the length of a clip reaches ten hours, and recording is automatically resumed after few seconds.

When the recording mode is AVCHD

SDHC memory cards, SDXC memory cards and microP2 cards can be used.

■ For SDHC memory card

Recording format	Recording rate	Recording capacity			
		4 GB	8 GB	16 GB	32 GB
PS	25 Mbps	Approx. 19 minutes	Approx. 40 minutes	Approx. 1 hour 20 minutes	Approx. 2 hours 40 minutes
PH	21 Mbps	Approx. 21 minutes	Approx. 46 minutes	Approx. 1 hour 30 minutes	Approx. 3 hours
HA	17 Mbps	Approx. 30 minutes	Approx. 1 hour	Approx. 2 hours	Approx. 4 hours 10 minutes
PM	8 Mbps	Approx. 1 hour	Approx. 2 hours	Approx. 4 hours 15 minutes	Approx. 8 hours 30 minutes
SA	9 Mbps	Approx. 1 hour	Approx. 2 hours	Approx. 4 hours	Approx. 8 hours

■ For SDXC memory card

Recording format	Recording rate	Recording capacity	
		64 GB	128 GB
PS	25 Mbps	Approx. 5 hours 20 minutes	Approx. 11 hours
PH	21 Mbps	Approx. 6 hours	Approx. 12 hours 30 minutes
HA	17 Mbps	Approx. 8 hours 30 minutes	Approx. 17 hours
PM	8 Mbps	Approx. 17 hours 10 minutes	Approx. 35 hours
SA	9 Mbps	Approx. 16 hours	Approx. 32 hours 15 minutes

NOTE

- File is split approximately every 4 GB for the data in AVCHD format.
  These are displayed as one clip in the thumbnail screen. However, the clips recorded across two memory cards using the relay recording are displayed as separate clips.
- The recording is stopped once when the recording time reaches ten hours, and recording is automatically resumed after few seconds. Image and audio during the pause will not be recorded. This includes the case of special recording, such as relay recording.
- Protection is automatically released on memory cards locked with AVCHD protection such as DVD recorders.

Handling the recording data

Folder structure example of a memory card

Various important information is contained in the recording data, and it is linked with the folder structure and management files as shown in the figure. If the information is changed or deleted even partially, an error such as that the data cannot be recognized or the recording becomes impossible may occur.

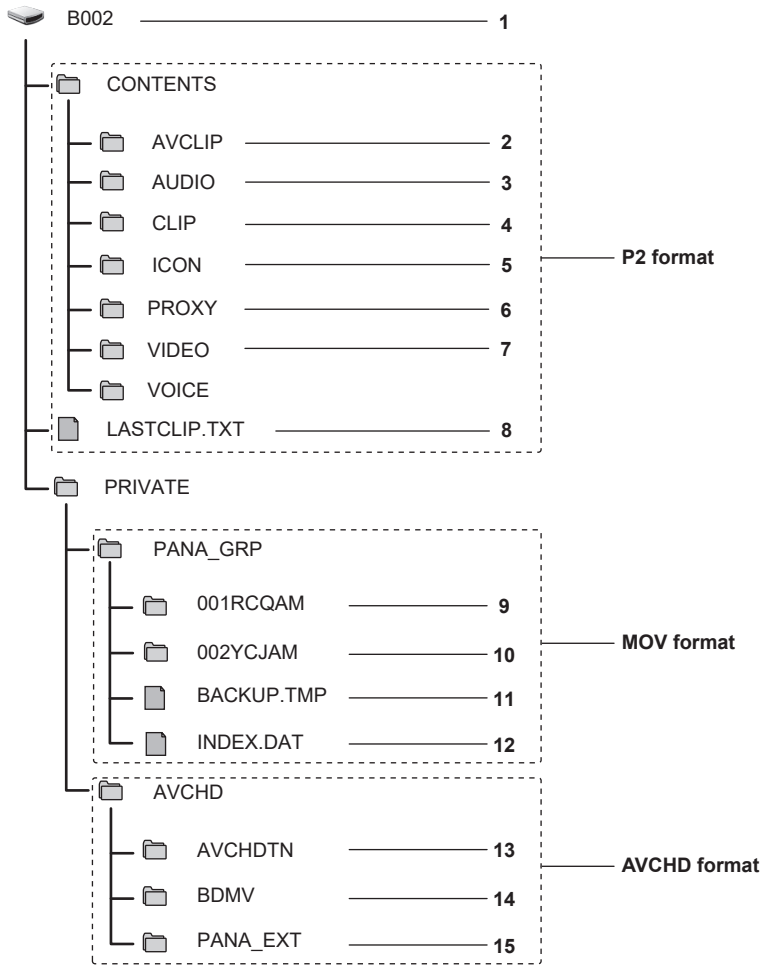

1 Volume label of the memory card

2 Video data in MXF format (audio: LPCM) (when recording format is AVC-Intra 422/AVC-LongG50/AVC-LongG25/AVC-LongG12)

3 Audio data in MXF format (when recording format is AVC-Intra 200/AVC-Intra 100/AVC-Intra 50)

4 Meta data in XML format

5 Thumbnail in BMP format

6 Proxy data in MOV format and realtime metadata in BIN format

7 Video data in MXF format (when recording format is AVC-Intra 200/AVC-Intra 100/AVC-Intra 50)

8 The file to which the information of the final clip was recorded

9 Video data in MOV format: UHD (3840×2160), 29.97P MOV (audio: LPCM)

10 Video data in MOV format: FHD (1920×1080), 59.94i MOV (audio: LPCM)

11 Management file 1

12 Management file 2

13 Thumbnail of video data

14 Video data in AVCHD standard (00000.MTS, etc.)

15 Management folder

NOTE

- Do not erase a folder or file on the memory card with a computer. It may make it impossible to load on the camera.
- If data is recorded to the memory card with a computer, an error may occur such as an inability to recognize or record to the memory card with the camera.
- The memory card to use with the camera should always be formatted on the camera.
- The number of the P2 format clips that can be recorded on a single memory card is approximately 1000, and the AVCHD format clips is approximately 3900.
  Data will not be able to record when it reaches the maximum number of data that can be recorded.
- When transferring a recording data in a P2 format to a computer, or when writing back to a microP2 card, be sure to use the dedicated software “P2 Viewer Plus” to prevent data loss. For details on downloading P2 Viewer Plus and the operating environment, visit the support desk at the following website:
  https://pro-av.panasonic.net/
- Follow the instructions below when using a general IT tool such as the OS standard file manager equipped on a computer to transfer a recording data in P2 format to a computer. However, be sure to use P2 Viewer Plus when returning data back to a microP2 card.
  - Perform the transfer for each CONTENTS folder and LASTCLIP.TXT file.
  - Do not operate the folders under the CONTENTS folder.
  - When copying, copy the LASTCLIP.TXT file at the same time as the CONTENTS folder.

- When transferring the data in multiple microP2 cards to a computer, create a folder for each memory card to prevent clips with the same name from being overwritten.
- Do not delete data inside a memory card.
- Be sure to format the memory card with a P2 device or P2 Viewer Plus.

Volume label of the memory card

■ When the recording mode is MOV

The value set in the [RECORDING] menu → [CLIP NAME] is stored in the volume label in the CAM INDEX + NEXT CARD COUNT format when the memory card is formatted. Once it is stored, [NEXT CARD COUNT] will increase by one. The CARD COUNT that is stored is also used for the CARD number of the MOV format file name.

NOTE

- When recording to the memory card that CAM INDEX + CARD COUNT is not stored in the volume label, the value set in the [RECORDING] menu → [CLIP NAME] is automatically stored in the volume label, and [NEXT CARD COUNT] will increase by one.

■ When the recording mode is P2 or AVCHD

The card serial number is stored in the volume label if the card being used is the microP2 card. “CAM_SD” is stored in the volume label if a card other than the microP2 card is used.

Folder name of the MOV format video data

The fourth through eighth characters of the folder name differ depending on the setting of the camera.

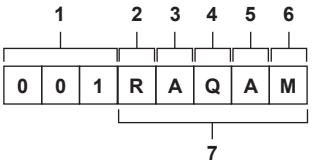

1 Folder number
001 to 999 (sequential number)
- The number of clips that can be recorded in one folder is 999. Once it reaches 999, a folder with sequential number added is newly created. Also, a folder with sequential number added is newly created when the folder name is changed by changing the setting of the camera. The folder name will return to 001 when the memory card is formatted.

2 Number of pixels
R: 3840×2160
Y: 1920×1080

3 Frame rate
A: 59.94fps
B: 50.00fps
C: 29.97fps
D: 25.00fps
F: 23.98fps

4 Video format
Q: Progressive recording (MOV, LPCM)
J: Interlace recording (MOV, LPCM)

5 Fixed values
A

6 Recording setting
M: Standard recording (card slot 1 for simultaneous recording)
T: Simultaneous recording (card slot 2 for simultaneous recording)

7 Recording format information

■ When the folder name is 001RAQAM

Following video data is saved in the folder.
- Number of pixels: 3840×2160
- Frame rate: 59.94fps
- Video format: Progressive recording (MOV, LPCM)

File name of the MOV format video data

The format of the file name is as follows.

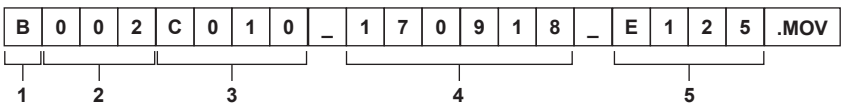

1 CAM INDEX
One character from upper case A to Z.
- An INDEX assigned to each camera. Set with the [RECORDING] menu → [CLIP NAME] → [CAM INDEX].

2 CARD number
001 - 999
- This is the number assigned to each memory card. The CARD COUNT stored in the volume label of the memory card is assigned.

3 Clip number
C001 - C999
- This is a sequential number assigned to each recording on the memory card. The number returns to C001 when the memory card is formatted. It will also return to C001 for the one after C999.

  The clip number is maintained even when the folder is split or when the clip is deleted.

4 Date
Last two digits of year + two digits of month + two digits of date when the recording is started.

5 Hashtag generated from the serial number
Four-digit number or alphabet

NOTE

- The clip name of the card slot 2 will be the same as the clip name of the card slot 1 for the simultaneous recording.
- The maximum number of folder and the folder number is 999. The recording is prohibited when it reaches 999 even if number in between is open.
- The number of clips that can be recorded on a single memory card is approximately 4000. Data will not be able to be recorded when it reaches the maximum number of clips that can be recorded even if number in between is open.

Setting of time data

The camera provides time code, user bits, and date and time (real time) data as time data, and records in each frame synchronized with the video. The time data is also recorded as the clip meta data.

Definition of time data

■ Time code

[FREE RUN] and [REC RUN] can be switched with the [RECORDING] menu → [TC/UB] → [FREE/REC RUN].

- **[FREE RUN]:** Advances regardless of the operation mode. It is advancing even when the power is turned off, so it can be treated equally as time. Time data can also be recorded to the time code input to the <TC IN/OUT> terminal using slave lock.
- **[REC RUN]:** Advances only while recording. Recording is started with the value continuing from the last time code recorded previously.

NOTE

- The [REC RUN] will not be a continuous value for following cases.
  - When deleting recorded clips
  - When recording is interrupted due to a malfunction of [REC WARNING], etc. during recording.
- It will be fixed to [FREE RUN] when pre-recording is enabled.
- [REC RUN] is fixed when the variable frame rate recording function or the super slow recording function is enabled.
- It will be fixed to [REC RUN] when the interval recording function is enabled.
- [FREE RUN] is fixed when the background recording function is enabled.

■ User bits

User bits are built-in. User bits are recorded in the clip. Also, it is output as LTC UB, VITC UB of the SDI signal.

The user setting value, time, date, time code, and frame rate information of shooting, and the clip name can be selected for recording.

The value at the time when the recording has started is recorded in the user bits of the clip meta data.

■ Counter

Press the <COUNTER> button and display the counter to display the counter value in the time code display of the viewfinder/LCD monitor.

Counter value is displayed as “hour:minute:second.frame”.

In addition, press the <RESET> button while the counter value is displayed to reset the counter value.

Either of the following settings can be set in the [RECORDING] menu → [REC COUNTER].

- [TOTAL]: Press the <RESET> button to continuously count until reset. The counter value will be maintained even if the memory card is replaced or the power is turned off.
- [CLIP]: Clears the counter value and starts counting from 0 each time recording starts. You can shoot while always checking the recording time of the clip you are currently shooting.

■ Date/time (real time)

- The internal clock will be the reference for the measurement of the free run time code while the power is set to < ⏻ > (standby), time of the user bits, and date data. Also, it will be the reference for the file generation time and file name when the clip is recorded.

NOTE

- The display in the camera image screen is toggled with the <COUNTER> button.

User bits settings

Set the user bits to be recorded.

1 Select the user bits to record in the [RECORDING] menu → [TC/UB] → [UB MODE].

[FRAME RATE]	Records the frame rate information of the shooting. Use with this setting when using the frame rate information of the user bits with an editing device such as a computer. Use this setting to control the recording operation in TYPE1 or TYPE2 method against the Panasonic recorder (AJ-PG50, etc.).
[USER]	Records the user bits set in the [RECORDING] menu → [TC/UB] → [UB PRESET]. The setting value is maintained even when the power is set to < ⏻ > (standby). For details, refer to “How to input user bits” (page 47).
[TIME]	Records the hour, minute, and second of the date and time measured with the internal clock.
[DATE]	Records the last two digits of year, month, date, and hour of the date and time measured with the internal clock.
[TC]	Records the value for the time code as users bits.
[CLIP NAME]	Records the value that CAM INDEX (one character) and CARD COUNT (three-digit number) both converted to ASCII character code.

How to input user bits

By setting user bits, information such as memos (date, time) up to eight digits long (hexadecimal) can be recorded.

1 Select the [RECORDING] menu → [TC/UB] → [UB MODE] → [USER].

2 Select the [RECORDING] menu → [TC/UB] → [UB PRESET].

The user bits setting screen is displayed.

3 Set the user bits.

- Set two digits each.
  Press the <RESET> button to reset to [00].

4 Confirm the setting value of the user bits.

- The setting value is confirmed when last two digits are set.

Memory function of the user bits

Setting contents of the user bits is automatically recorded, and it is maintained even if the power is set to < ⏻ > (standby).

Frame rate information

The relationship between frame rate, image pull-down, time code, and user bits is as follows.

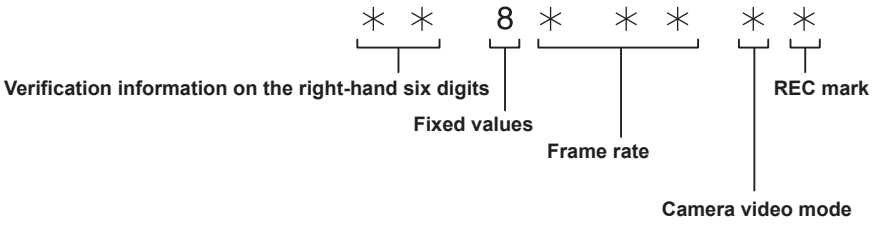

■ Camera video mode

The display of the camera video mode differs depending on the setting of following menus.

- The [SYSTEM] menu → [REC FORMAT]
- The [SCENE FILE] menu → [VFR] or the [SYSTEM] menu → [SUPER SLOW]

[FREQUENCY]	Recording frame frequency of [REC FORMAT]	Display of camera video mode	
		When [VFR] or [SUPER SLOW] is [ON]	When [VFR] and [SUPER SLOW] are [OFF]
[59.94Hz]	23.98p	D	C
	29.97p	9	8
	59.94p	9	8
	59.94i	—	0
[50.00Hz]	25.00p	B	A
	50.00p	B	A
	50.00i	—	2

Setting the time code

1 Select the [SYSTEM] menu → [FREQUENCY] → [59.94Hz]/[50.00Hz].

2 From the [SYSTEM] menu → [FILE FORMAT]/[REC FORMAT], select the recording format.

3 Select the [RECORDING] menu → [TC/UB] → [DF/NDF] → [DF]/[NDF].

[DF]: Advances the time code in the drop frame mode.
[NDF]: Advances the time code in the non-drop frame mode.

4 Select the [RECORDING] menu → [TC/UB] → [TC PRESET].

The [TC PRESET] screen is displayed.

5 Set the time code.

- Press the <RESET> button to reset the time code to 0.

6 Confirm the setting value of the time code.

- The setting value is confirmed when last two digits are set.

■ Setting range of time code

The range of the time code that can be set differs depending on the recording frame frequency of [REC FORMAT].

[FREQUENCY]	Recording frame frequency of [REC FORMAT]	Range of the time code that can be set
[59.94Hz]	59.94p, 29.97p, 59.94i	00:00:00:00 - 23:59:59:29
	23.98p	00:00:00:00 - 23:59:59:23
[50.00Hz]	50.00p, 25.00p, 50.00i	00:00:00:00 - 23:59:59:24

NOTE

- The set change is not reflected if the time code setting screen is closed without confirming the setting value.
- Set the number of frames with a value that is a multiple of four when the recording frame frequency of [REC FORMAT] is set to 23.98p. The recorded time code will shift with any other value.

Time code function during battery replacement

The operation of the time code generator will continue by the backup mechanism functioning even when replacing the battery.

The time code of the free run may shift when any item in the [SYSTEM] menu → [FREQUENCY], [FILE FORMAT], or [REC FORMAT] is changed. Set the power to < ❙ > (ON) again, confirm the time code, and set it again if necessary.

Time code in variable frame rate recording/super slow recording

The time code is fixed to [REC RUN] when the variable frame rate recording function or the super slow recording function is enabled. The time code will advance while recording at a speed corresponding to the ratio of the recording frame frequency of [REC FORMAT] and the setting values in the [SCENE FILE] menu → [FRAME RATE].

As an example, the time code will advance 60/24 frames per second (two seconds 12 frames) when the recording frame frequency of [REC FORMAT] is set to 23.98p and the [SCENE FILE] menu → [FRAME RATE] is set to [60fps].

- The time code output from the <TC IN/OUT> terminal or the <SDI OUT> terminal is advanced in 1x speed from the exact start of recording.

Presetting the time code to external

The internal time code generator of the camera can be slave locked in a simplified manner to an external generator.

Connection example of the camera and an external generator

Connect the reference time come to the <TC IN/OUT> terminal.

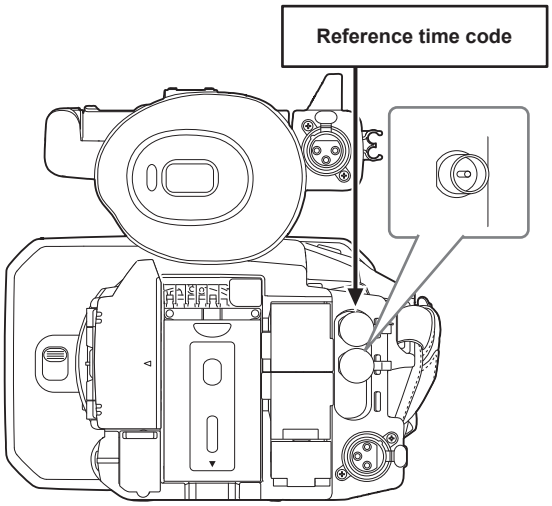

External lock

Externally lock the time code.

- Connect the camera to an external generator in advance.

1 Select the [RECORDING] menu → [TC/UB] → [FREE/REC RUN] → [FREE RUN].

2 Select the [RECORDING] menu → [TC/UB] → [TC IN/OUT SEL] → [TC IN].

3 Enter the external time code to the <TC IN/OUT> terminal.

[TCG] in the camera image screen will be displayed in black and white inversion.
Enter the time code matching the setting in the [SYSTEM] menu → [REC FORMAT] as the reference time code.
Enter the time code of the non-drop frame as well for 23.98p, 25.00p, 50.00p, and 50.00i.

NOTE

- Do not slave lock to the externally input time code but automatically advance with internal reference during recording or rec remote controlling of the external recording device.
  The time code value may overlap or drop out after recording or ending rec remote due to performing slave lock to the time code input from external.
- Since this camera does not have a genlock system, the time code may shift one frame.
- Once the slave lock is performed, it will maintain the slave lock status even when the input from the <TC IN/OUT> terminal is gone. However, the slave lock status will be cleared in following cases.
  - When the time code is set in [TC PRESET]
  - When the power is turned off
  - When switched [DF]/[NDF]
  - When set to [REC RUN]
  - When the variable frame rate recording function or super slow recording function is enabled
- The pre-recording will be discarded once when the slave lock is performed during pre-recording.
- The number of frames for the record start time code may not be a multiple of four when the recording frame frequency of [REC FORMAT] is set to 23.98p.
- External locks by user bits are not supported.

Cautions when switching the power supply from the battery to the AC adaptor while an external lock is active

To maintain the continuity of the time code generator power, remove the battery only after the power status display in the camera image screen has changed to after connecting the AC adaptor to the <DC IN 12V> terminal. The continuity of the external lock of the time code is not guaranteed when the battery is removed first.

Supplying the time code externally

The time code output from the camera corresponding to the camera video or the playback video can be supplied to an external recording device.

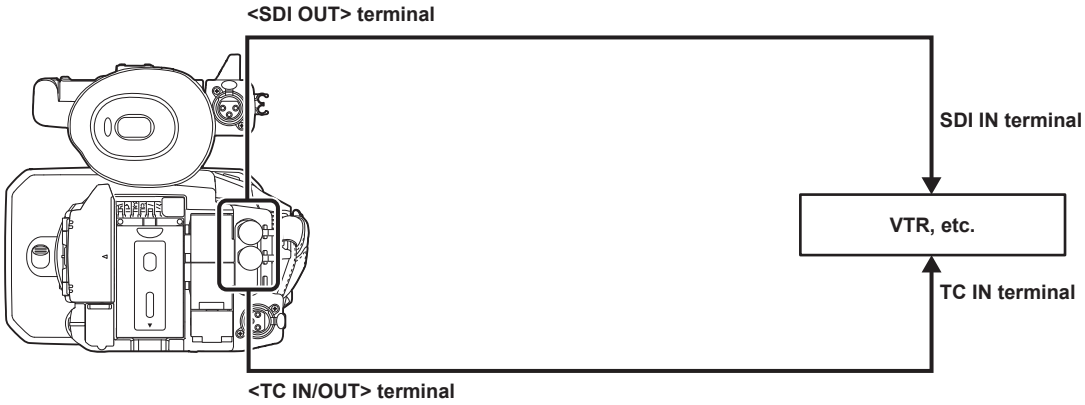

1 **Select the [RECORDING] menu → [TC/UB] → [TC IN/OUT SEL] → [TC OUT].**

2 **Select the [RECORDING] menu → [TC/UB] → [TC OUT REF] → [RECORDING].**

The same time code can be recorded to the video of the same time on two devices.

■ **To match the time code output from the <TC IN/OUT> terminal to the video of the SDI output or the monitor output**

1 **Select the [RECORDING] menu → [TC/UB] → [TC OUT REF] → [SDI OUT].**

NOTE

- TCR is output during playback. TCG output during playback is not supported.
- The time code output may shift by 1 frame when the recording frame frequency of [REC FORMAT] is set to 23.98p.
- External locks by user bits are not supported.

Assigning function to the USER buttons

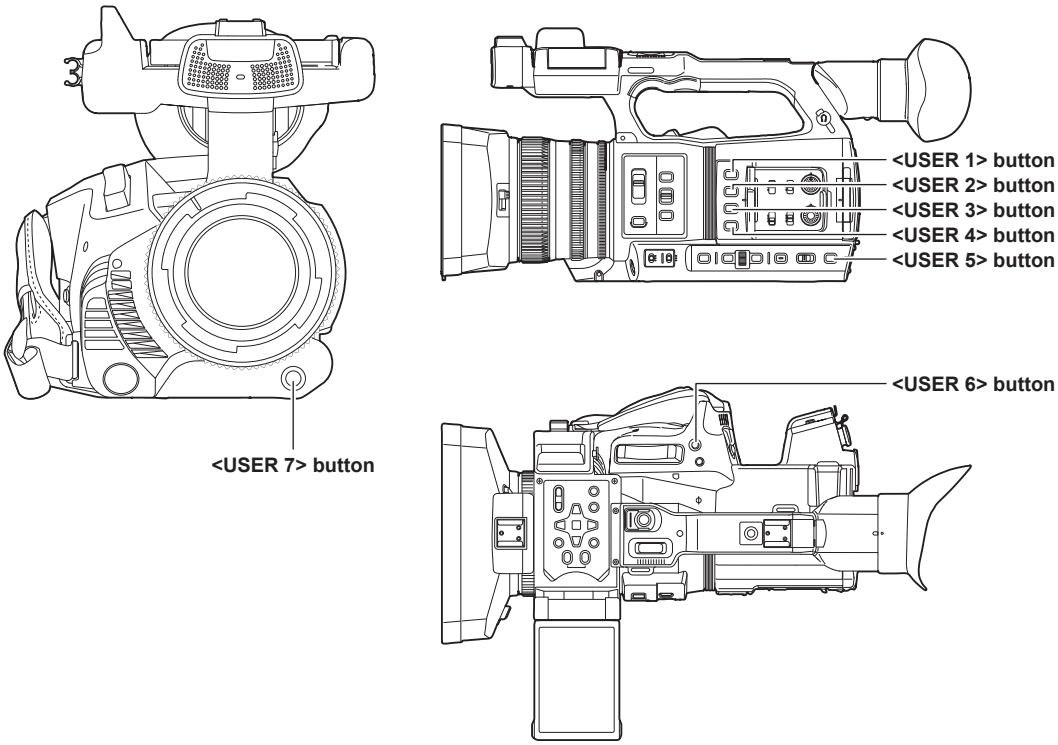

Selected function can be assigned to the USER buttons.

The USER buttons have seven USER buttons on the camera (<USER 1> to <USER 7> buttons) and five USER button icons displayed on the LCD monitor ([USER8] to [USER12] button icons).

The <USER 1> to <USER 7> buttons can be used as the USER buttons when the camera image screen is displayed.

The [USER8] to [USER12] button icons can be used as the USER buttons when the operation icon screen is displayed.

1 Select the function to assign to each in the [CAMERA] menu → [USER SW] → [USER1] to [USER12].

■ Functions assigned to the USER buttons in the factory setting

USER button	Function
<USER 1> button	[O.I.S.]
<USER 2> button	[ZEBRA]
<USER 3> button	[WFM]
<USER 4> button	[A.IRIS LEVEL]
<USER 5> button	[SLOT SEL]
<USER 6> button	[IRIS]
<USER 7> button	[AWB]
[USER8]	[IR REC]
[USER9]	[FOCUS MACRO]
[USER10]	[AREA]
[USER11]	[ATW LOCK]
[USER12]	[MENU]

Functions assigned to USER buttons

Item	Description
[INHIBIT]	Disables assignment of functions.
[AWB]	Assigns the automatic white balance function.
[DRS]	Assigns the dynamic range stretcher function.
[FBC]	Enables/disables the flash band compensation function.
[ONE PUSH AF]	Assigns the one-push auto focus function. The same is performed when the <PUSH AUTO> button is pressed.
[S.GAIN]	Assigns the function that increases the gain to 24 dB or more.
[AREA]	Assigns the area function.
[AF AREA]	Assigns the area auto focus function.
[FACE DETECT]	Enables/disables the face detection AE&AF function.
[ATW]	Enables/disables the auto tracking white balance functions.

Item	Description
[ATW LOCK]	Fixes the value of the white balance. Press the USER button again or touch the USER button icon to resume the operation of the auto tracking white balance. • Enable when the auto tracking white balance is operating.
[SPOTLIGHT]	Enables/disables the auto iris control function for the spot light.
[BACKLIGHT]	Enables/disables the auto iris control function for the backlight compensation.
[A.IRIS LEVEL]	Enables/disables the auto iris level function.
[IRIS]	Assigns the function that switches the auto iris and manual iris.
[Y GET]	Assigns the function that displays the luminance level of the frame area displayed near the center.
[FOCUS MACRO]	Switches the focus macro setting.
[O.I.S.]	Enables/disables the optical image stabilizer function.
[O.I.S. MODE]	Switches the operation mode of the optical image stabilizer function. Toggles [NORMAL], [PAN/TILT], and [STABLE] in order each time the USER button is pressed or the USER button icon is touched.
[i.ZOOM]	Assigns the zoom function to minimize image distortion.
[D.ZOOM]	Enables/disables the digital zoom. Zooms in on the field angle by 2x, 5x, and 10x vertically and horizontally each time the USER button is pressed or the USER button icon is touched.
[IR REC]	Enables/disables the IR recording.
[FAST ZOOM]	Speeds up the zoom speed when the zoom lever is pushed in all the way.
[ADAPTIVE MATRIX]	Enables/disables the function to control the linear matrix in accordance with the shooting condition.
[BARS]	Toggles whether to turn the color bars on or off. The color bar is interlocked with the test tone (1 kHz).
[PRE REC]	Enables/disables the pre-recording.
[VFR]	Enables/disables the variable frame rate recording function.
[SUPER SLOW]	Enables/disables the super slow recording function.
[REC CHECK]	Automatically plays back the last approximately three seconds of the previously shot clip.
[BACKGR PAUSE]	Assigns the function that stops the background recording of card slot 2. Press and hold the USER button to which [BACKGR PAUSE] is assigned for approximately five seconds or touch and hold the USER button icon for approximately five seconds and release to stop background recording.
[DEL LAST CLIP]	Deletes the clip last shot.
[SLOT SEL]	Selects the card slot with the memory card for recording inserted. Or, switches the card slot for the clip to display in the thumbnail screen.
[AUDIO CH1 LEVEL]	Switches the recording level adjustment method for audio channel 1 between automatic and manual.
[AUDIO CH2 LEVEL]	Switches the recording level adjustment method for audio channel 2 between automatic and manual.
[EXPAND]	Enables/disables the enlarged display function (focus assist function).
[PEAKING]	Enables/disables the peaking display (focus assist function).
[WFM]	Switches the display of the waveform monitor. The waveform display is selected in the [VIDEO OUT/LCD/VF] menu → [EI ASSIST] → [WFM MODE].
[ZEBRA]	Displays/hides zebra patterns.
[LEVEL GAUGE]	Displays/hides the level gauge.
[LEVEL GAUGE SET]	Sets the current horizontal and vertical direction as the reference value of the level gauge.
[LCD/VF HDR]	Toggles output images from the LCD monitor and view finder between the high dynamic range and standard dynamic range.
[LCD/VF V-Log]	Toggles output images from the LCD monitor and view finder between V-Log and V-709.
[VF ON/OFF]	Forces images to be displayed in the viewfinder.
[LCD/VF DETAIL]	Adjusts the intensity for the contour of the video in the viewfinder or LCD monitor to make it easier to focus.
[AUDIO MON SEL]	Switches the audio channel 1/2 and the audio channel 3/4 for the output audio (headphone terminal, built-in speaker, <AV OUT> terminal) while the USER button is pressed or the USER button icon is touched. Also, the display of the audio level meter is switched between the audio channel 1/2 and the audio channel 3/4.
[AUDIO OUT]	Switches the audio channel and the format to output from the <AV OUT> terminal, the headphone terminal, and the built-in speaker. When the [AUDIO] menu → [OUTPUT SETTINGS] → [AUDIO OUT] is set to [CH1]/[CH2]/[CH1/2 STEREO]/[CH1/2 MIX], toggles [CH1], [CH2], [CH1/2 STEREO], and [CH1/2 MIX] in order each time the USER button is pressed or the USER button icon is touched. When the [AUDIO] menu → [OUTPUT SETTINGS] → [AUDIO OUT] is set to [CH3]/[CH4]/[CH3/4 STEREO]/[CH3/4 MIX], toggles [CH3], [CH4], [CH3/4 STEREO], and [CH3/4 MIX] in order each time the USER button is pressed or the USER button icon is touched.
[MENU]	Switches display/hide of the menu.
[LOAD SETUP FILE]	Selects the setup file saved on the memory card to load on the camera.
[LCD BACKLIGHT]	Switches the brightness of the LCD monitor. Toggles [0], [1], [2], and [–1] in order each time the USER button is pressed or the USER button icon is touched.
[CARD READER MODE]	Enables/disables the card reader mode function (USB mass storage function). • Release the connection to enable the card reader mode when connected to a network via a wireless LAN. (The camera returns to the original setting when the card reader mode is disabled.)
[STREAMING START]	Starts/stops streaming from the camera. Streaming starts only during RTMP streaming.
[SHOT MARK]	Assigns the shot mark function.

NOTE

- Following functions will be disabled when the camera is set to < ⏻ > (standby) and then turned on again.
  [FBC], [S.GAIN], [AREA], [AF AREA], [ATW LOCK], [SPOTLIGHT], [BACKLIGHT], [Y GET], [D.ZOOM], [FAST ZOOM], [BARS], [EXPAND], [PEAKING], [WFM], [VF ON/OFF], [AUDIO MON SEL], [CARD READER MODE], [STREAMING START]

Checking the function assigned to the USER buttons

You can check the function assigned to the USER buttons in the SWITCH screen of the mode check. For details, refer to “Mode check display” (page 182).

Adjusting and setting the LCD monitor

Using the LCD monitor

This camera is equipped with a 3.15-inch LCD monitor. Use either the viewfinder or the LCD monitor depending on your purpose and the shooting conditions.

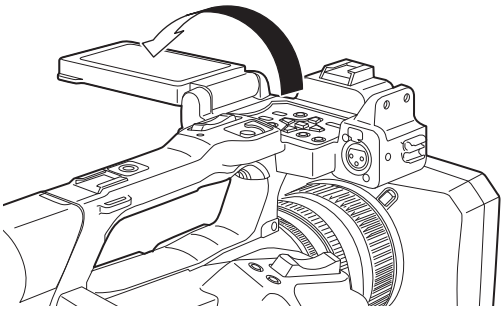

Fig. 1

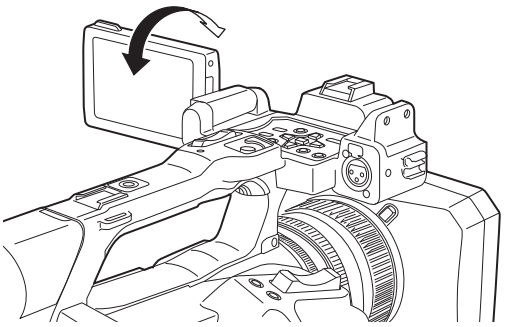

Fig. 2

1 Open the LCD monitor. (Fig. 1)

The light goes on when the LCD monitor is opened. The light goes off when it is closed.

2 Turn the LCD monitor to a comfortable viewing angle. (Fig. 2)

Turns 90° toward the lens and 180° toward you.

NOTE

- When closing the LCD monitor, be sure to close it firmly.
- Take care not to apply excessive force on the LCD monitor when it is opened. Doing so may result in a malfunction.
- Condensation sometimes forms on the LCD panel of the LCD monitor in locations subject to extreme temperature differences. If this happens, wipe with a soft, dry cloth.
- If the camera is very cold, the LCD monitor will be slightly darker than normal immediately after the power is turned on. The brightness will return to normal when the internal temperature increases.
- The image brightness and color hue seen on the viewfinder and LCD monitor may be different from that seen on a TV monitor. The final check of the image should be done on a TV monitor.

Adjusting the LCD monitor

■ Adjusting the brightness, contrast, and color level

[BRIGHTNESS] (brightness), [CONTRAST] (contrast), and [COLOR LEVEL] (color level) can be adjusted in the [VIDEO OUT/LCD/VF] menu → [LCD].

The adjustments of the LCD monitor do not affect the images output or recorded by the camera.

■ Adjusting the backlight luminance

Switches the brightness of the LCD monitor backlight. There are the following two methods:

- Set with the [VIDEO OUT/LCD/VF] menu → [LCD] → [BACK LIGHT].
- Toggles [0], [1], [2], and [–1] in order each time the USER button to which [LCD BACKLIGHT] is assigned is pressed or the USER button icon is touched.

Mirror shooting

When recording with the LCD monitor rotated towards the lens side, if the camera is set to the [VIDEO OUT/LCD/VF] menu → [LCD] → [SELF SHOOT] → [MIRROR], the image is displayed in reverse in left and right on the LCD monitor. This allows shooting as if looking at a mirror image. Note that only the display of the LCD monitor is horizontally reversed. The settings for mirror shooting do not affect the images output or recorded by the camera.

Adjusting and setting the viewfinder

This camera is equipped with a 0.39-inch organic EL viewfinder. Use either the viewfinder or the LCD monitor depending on your purpose and the shooting conditions.

Using the viewfinder

When the LCD monitor is difficult to use because the surroundings are bright, you can check the image using the viewfinder.

Positioning your eye near the viewfinder will trigger the eye sensor to automatically display the image.

- The sensitivity of the eye sensor is set in the [VIDEO OUT/LCD/VF] menu → [VF] → [EYE SENSOR] → [HIGH] or [LOW].
- The eye sensor may not work properly depending on the shape of the eyeglasses you may be wearing, how you hold the camera, or by strong light present in the vicinity of the eyepiece. If this happens, switch the image display by assigning [VF ON/OFF] to the USER button.

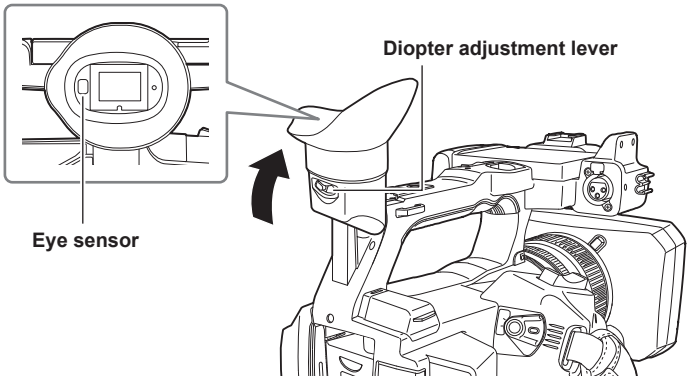

1 Move the viewfinder in the vertical direction to adjust the screen to a comfortable angle.

The viewfinder can be lifted vertically to approximately 90 degrees.

2 Adjust the characters on the viewfinder screen so that they are clearly visible using the diopter adjustment lever.

NOTE

- The image brightness and color hue seen on the viewfinder and LCD monitor may be different from that seen on a TV monitor. The final check of the image should be done on a TV monitor.

Adjusting the viewfinder

■ Adjusting the brightness, contrast, and color level

Adjust [BRIGHTNESS] (brightness), [CONTRAST] (contrast), and [COLOR LEVEL] (color level) in the [VIDEO OUT/LCD/VF] menu → [VF].

The adjustments for the viewfinder do not affect the images output or recorded by the camera.

■ Switching between color and monochrome

The viewfinder screen can toggle between a color display and monochrome display. Set the display with the [VIDEO OUT/LCD/VF] menu → [VF] → [VF COLOR].

Tally lamp

The front tally lamp and the rear tally lamp can be illuminated during the shooting.

1 Select the [OTHERS] menu → [LED] → [TALLY LED] → [FRONT]/[REAR]/[BOTH].

2 Select the [OTHERS] menu → [LED] → [REC TALLY] → [ON].

- The tally lamp will flash when the camera is in the following status.
  - When the remaining recording capacity of the memory card or the remaining battery level is low (one time per second)
  - When the memory card has no more space to record (four times per second)
  - When a warning such as a system error or a recording abnormality has occurred (four times per second)

NOTE

- The tally lamp will not illuminate or flash when the [OTHERS] menu → [LED] → [TALLY LED] → [OFF] is set.

Chapter 4 Operation

This chapter describes how to operate the screen of this camera, how to operate the menu, the structure of the menu, and details of the menu.

Basic operation of the screen

Major button operation and screen display

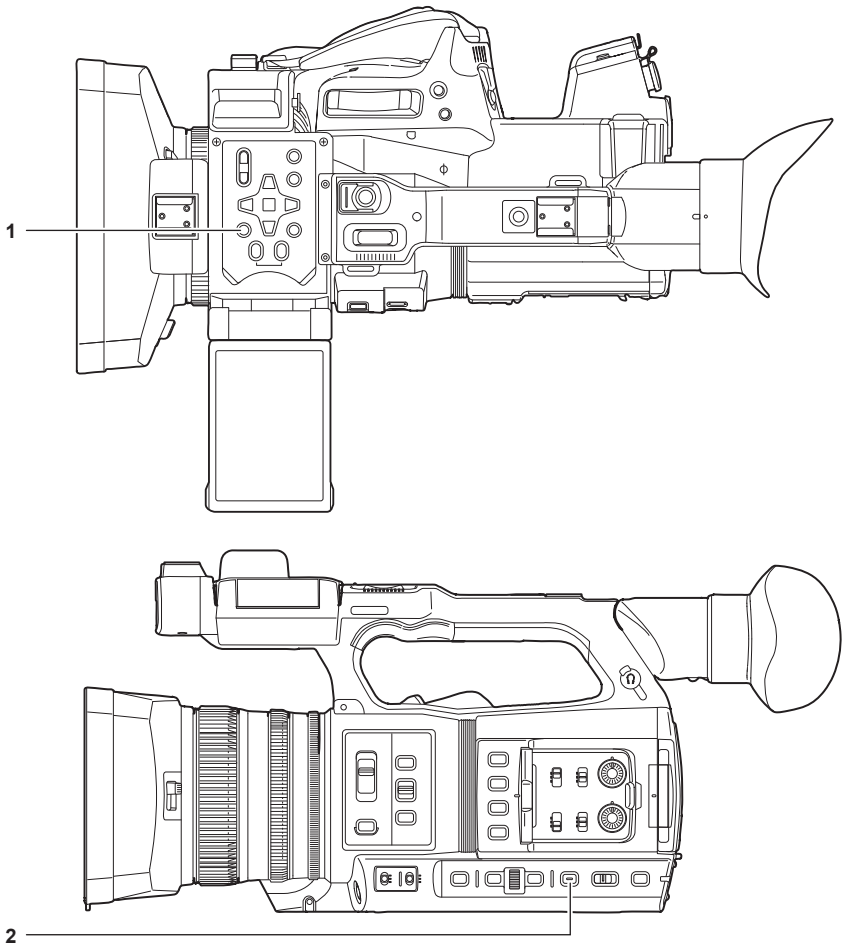

1 <THUMBNAIL> button

2 <DISP/MODE CHK> button

■ <THUMBNAIL> button

Displays the thumbnail screen.

Playback, copy, delete, or protect of a clip can be performed.

For details about the thumbnail screen, refer to “Thumbnail operation” (page 160).

■ <DISP/MODE CHK> button

Press while the camera image screen is displayed to display or hide most of the items.

Press the <DISP/MODE CHK> button for one second or more while displaying the camera image screen to display the STATUS screen of the mode check.

Each setting and the status of the camera can be confirmed.

For details about each screen of the mode check, refer to “Mode check display” (page 182).

Major button operation and switching screen

Switches the screen as follows when the <DISP/MODE CHK> button, <EXIT> button, <THUMBNAIL> button, <SET> button or <■> button is pressed.

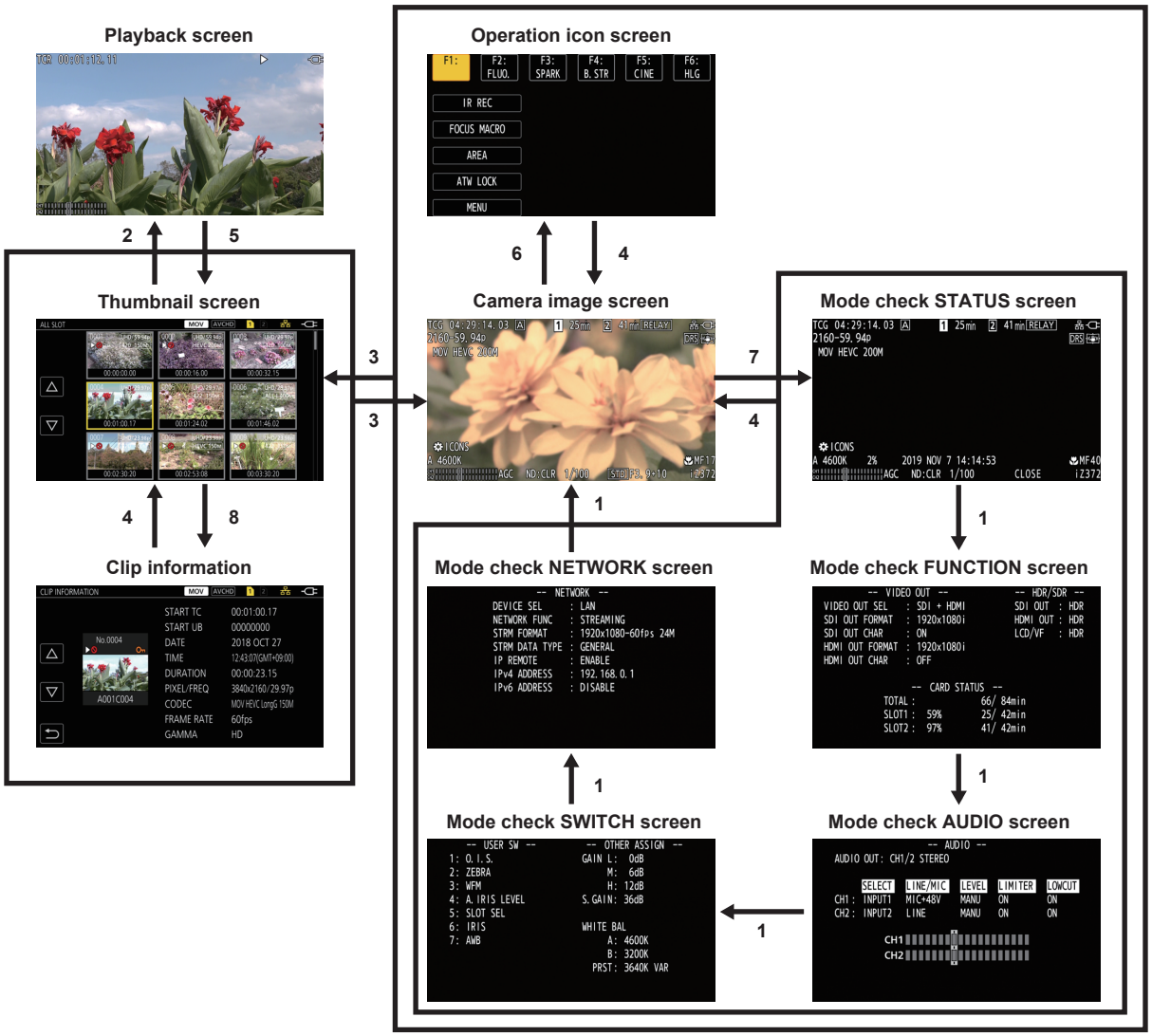

1 **Press the <DISP/MODE CHK> button.**

2 **Press the <SET> button or multidial.**

3 **Press the <THUMBNAIL> button.**

4 **Press the <EXIT> button.**

5 **Press the <THUMBNAIL> button or the <■> button.**

6 **Press the multidial when the [⚙ ICONS] is displayed.**

7 **Press the <DISP/MODE CHK> button for one second or more.**

8 **Select the [THUMBNAIL] menu → [CLIP] → [INFORMATION].**

NOTE

- The camera image screen is displayed when the camera is turned on.
- The camera image screen is automatically displayed if recording starts while the thumbnail screen, playback screen or clip information is displayed.
- The playback screen is displayed if a clip is selected in the thumbnail screen.
- The thumbnail screen is displayed if the playback of the clip ends or playback is stopped.
- The operation icon screen is displayed if the LCD monitor is touched for one second or more while the camera image screen is displayed.
- The camera changes to the camera image screen if any area other than the icon in the operation icon screen is touched. The camera image screen is displayed automatically after five seconds without any operation of the multidial or touch operation in the operation icon screen.
- The camera image screen is automatically displayed after five seconds without operation of the <DISP/MODE CHK> button in each screen of the mode check.
  The screen will not switch to the camera image screen while the <DISP/MODE CHK> button is pressed.
- The camera image is displayed in the operation icon screen and each screen for the mode check.

Operating each screen

Camera image screen

Displays the shooting screen.
For details about the camera image screen, refer to “Screen status display” (page 175).

Thumbnail screen

Playback, copy, delete, or protect of a clip can be performed.
For details about the thumbnail screen, refer to “Thumbnail operation” (page 160).

Operation icon screen

You can select the scene file or operate the functions assigned to [USER8] through [USER12].
For details about the operation icon screen, refer to “Operation icon screen display” (page 156).

Basic operation of the menu

The setting of the camera can be changed with the menu in accordance to the shooting scene or recording contents.
Set data is written and saved in the camera memory.

- There are two methods of operation: a method to operate with the multidial, or a method to touch the LCD monitor.

Configuration of the menu

Menu types and how to open them

Menu type	Use	How to open
Menu	The menu is structured in categorized levels according to intended use and setting frequency.	Displayed by pressing the <MENU> button.

Configuration of the menu

[THUMBNAIL] menu	Performs confirmation or deleting of the recording clip. This menu can be set when the thumbnail screen is displayed.
[CAMERA] menu	Sets the basic camera function. This menu cannot be set when the thumbnail screen is displayed.
[SCENE FILE] menu	Sets the setting regarding scene file. This menu sets the detailed image quality adjustment of the camera video. Also, selection of the scene file, writing the scene file data to the camera memory, and loading from the camera memory can be performed. This menu cannot be set when the thumbnail screen is displayed.
[AUDIO] menu	Sets the input/output function of audio.
[VIDEO OUT/LCD/VF] menu	Configures the settings for the external output, the information to display in the LCD monitor or viewfinder and the output format.
[RECORDING] menu	Sets the various items in the recording function.
[NETWORK] menu	Sets the setting regarding the network function.
[SYSTEM] menu	Configures the settings regarding the recording format of video and audio.
[OTHERS] menu	Configures the settings for writing/loading/initializing user files to the internal memory, and the basic camera settings.

Displaying the menu

Displays the menu, and select the menu or item to set.

1 Press the <MENU> button when not recording.

The menu is displayed.

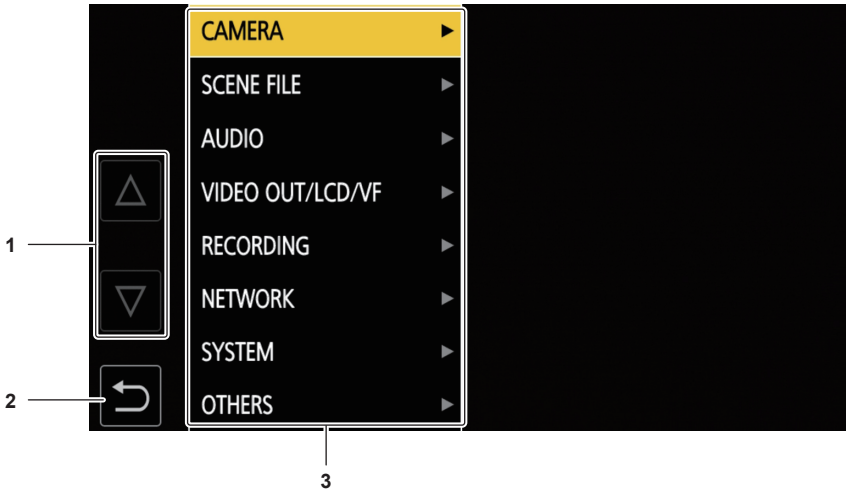

1 **[△]/[▽]**
Toggles the page or changes the value when selected.
These button icons are not available if they cannot be changed.

2 ⮌
Returns to one level higher from the current menu when selected.

3 **Menu**
Moves to one level lower from the current menu, or to the setting screen when selected.

4 **Level display**
Displays the path of the menu to the currently displayed screen.

5 **[SET]**
Confirms the set value when selected.

NOTE

- The menu displayed in gray characters cannot be changed.

Operating the menu

Various settings are possible from the menu.
There are two methods of operation: a method to operate with the multidial, or a method to touch the LCD monitor.

When operating with the multidial

Operate the multidial on the camera by turning it in vertical direction or pushing it.
Operations can also be performed by pressing the <◀◀> button, <■> button, <▶▶> button, <▶/❚❚> button and <SET> button.

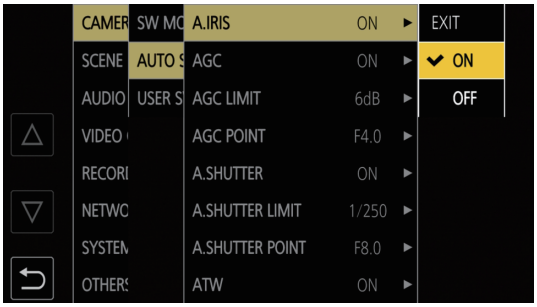

Fig. 1

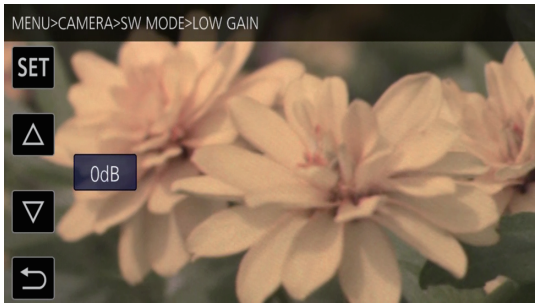

Fig. 2

1 Press the <MENU> button when not recording.

The menu is displayed.

2 Select the menu to set.

1) Turn the multidial to move the cursor to the menu to set.
   The cursor can also be moved by pressing the <■> button and <▶/❚❚> button.

2) Press the multidial or the <SET> button.
   The lower level menu is displayed.
   - The confirmation screen is displayed depending on the menu.
   - Perform the similar operation if there is next level.
   - In some menus, a screen to set the numeric value is displayed in the camera image screen (Fig. 2).
   - In some menus, a message is displayed if a menu cannot be executed.
   - Press the <EXIT> button or the <◀◀> button to return to one level higher.

3 Select the item to set.

1) Turn the multidial to move the cursor to the item to set.
   The cursor can also be moved by pressing the <■> button and <▶/❚❚> button.

2) Press the multidial or the <SET> button.
   A check mark is displayed at the left of the set item. (Fig. 1)
   - Press the <EXIT> button or the <◀◀> button to return to one level higher.

4 Press the <MENU> button to close the menu.

- Depending on the operating item, it will automatically return to the previous screen.

NOTE

- In the screen to set the numeric value (Fig. 2), press down and turn the multidial in the desired direction and fix it, or press and hold the <■> button and the <▶/❚❚> button to change the value at high speed.

When operating by touching the LCD monitor

Operate by touching the LCD monitor.

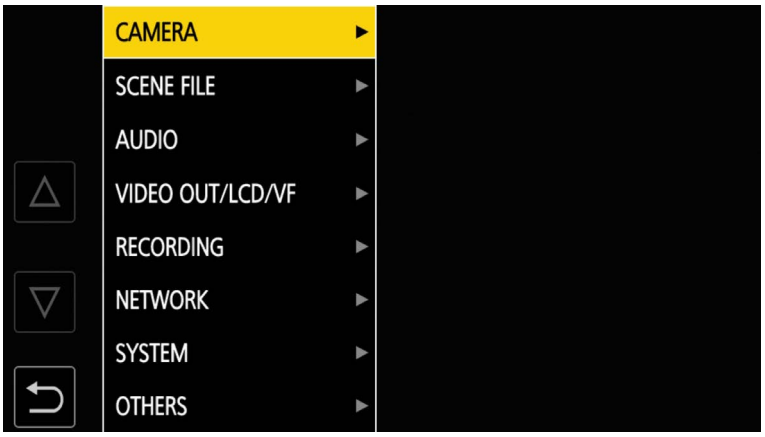

1 Press the <MENU> button when not recording.

The menu is displayed.

2 Select the menu to set.

- Touch the menu to set. The lower level menu is displayed.
- The confirmation screen is displayed depending on the menu.
- Perform the similar operation if there is next level.
- In some menus, a screen to set the numeric value is displayed in the camera image screen.
  To change the numeric value, touch [△]/[▽] and change the setting value.
- In some menus, a message is displayed if a menu cannot be executed.
- Touch [△]/[▽] to toggle the pages.
  The button icons cannot be touched if there are no more pages.
- To return to one level higher, touch ⮌.

3 Select the item to set.

- Touch the item to set. A check mark is displayed at the left of the set item.
- To return to one level higher, touch ⮌.

4 Exit from the menu by touching ⮌, or pressing the <MENU> button.

- Depending on the operating item, it will automatically return to the previous screen.

Initializing the menu

The menu can be returned to the factory setting condition.

1 Select the [OTHERS] menu → [MENU INITIALIZE].

2 Select [YES] when the confirmation message is displayed.

The setting value of the menu is returned to the factory setting.

Menu settings

[THUMBNAIL] menu

Performs confirmation or deleting of the recording clip.
This menu can be set when the thumbnail screen is displayed.

[PLAYBACK]

Sets the playback of recorded clips.
The clip selection is generally [ALL SLOT] when toggling the thumbnail screen from the camera image screen.

[CLIP SEL]

Selects a clip to be displayed on the thumbnail screen.

[ALL SLOT]	Displays the clips recorded on all the memory cards in each card slot.
[SLOT1]	Displays only the clips recorded on the memory card in card slot 1.
[SLOT2]	Displays only the clips recorded on the memory card in card slot 2.
[SAME FORMAT]	Displays only the clips recorded in the same format as the system format. Clips recorded in the same format means that each item of [FREQUENCY], [FILE FORMAT], [REC FORMAT], and [AUDIO SAMPLE RES.] in the [SYSTEM] menu matches the current setting status.
[MARKED]	Displays only the clips with a shot mark attached.

(Factory setting: [ALL SLOT])

[RESUME PLAY]

Select if the playback is to start from the position the playback has stopped or not.

[ON]	Plays back from the position where playback has stopped.
[OFF]	Always starts the playback from the beginning of the clip.

(Factory setting: [OFF])

[CLIP]

The clip can be protected or copied to a different memory card.

[PROTECT]	[SELECT]	Protect the clip so it is not mistakenly deleted. Select the clip to protect, and set the protect.
[DELETE]	[ALL]	Deletes all the clips displayed in the thumbnail screen. The clip that is not displayed in the thumbnail screen is not deleted.
	[SELECT]	Select the clip to delete, and delete it.
[COPY]	[ALL]	Copies all clips to a different memory card.
	[SELECT]	Selects the clip to copy, and copies the clip to a different memory card.
[REPAIR]		Repairs a clip displaying NG caused by the sudden power loss, etc., during recording in P2 format.
[RE-CONNECT]	[SELECT]	While recording in P2 format, a clip recorded over multiple microP2 cards may not be recognized as a continuous clip, and may display !. Restores as a continuous clip by selecting the clips to re-connect.
[INFORMATION]		Displays the detailed information of the clip.

NOTE

- The clip recorded in P2 format cannot be protected.
- The clip recorded in MOV format cannot be copied.

[DISPLAY]

Sets the display of the thumbnail screen.

[DATA]

Selects the content to be displayed in the time code display area.

[START TC]	Displays the time code value at the start of the recording.
[CLIP NAME]	Displays clip names.

(Factory setting: [START TC])

[CAMERA] menu

Sets the basic camera function.
This menu cannot be set when the thumbnail screen is displayed.

[SW MODE]

[LOW GAIN]

Sets the gain value to be assigned to the <L> position of the <GAIN> switch. (The negative value of gain can be set only when [SYSTEM] menu → [SHOOTING MODE] → [HIGH SENS.] is set.)

The items that can be set are as follows.

- When the [CAMERA] menu → [SW MODE] → [GAIN/ISO MODE] → [dB] is set
  - [–3dB]…[18dB]

  (Factory setting: [0dB])
- When the [CAMERA] menu → [SW MODE] → [GAIN/ISO MODE] → [ISO] is set
  - [ISO 400], [ISO 500], [ISO 640], [ISO 800], [ISO 1000], [ISO 1250], [ISO 1600], [ISO 2000], [ISO 2500], [ISO 3200], [ISO 4000], [ISO 5000], [ISO 6400], [ISO 8000], [ISO 10000], [ISO 12800]

  (Factory setting: [ISO 800])

[MID GAIN]

Sets the gain value to be assigned to the <M> position of the <GAIN> switch.

The items that can be set are as follows.

- When the [CAMERA] menu → [SW MODE] → [GAIN/ISO MODE] → [dB] is set
  - [–3dB]…[18dB]

  (Factory setting: [6dB])
- When the [CAMERA] menu → [SW MODE] → [GAIN/ISO MODE] → [ISO] is set
  - [ISO 400], [ISO 500], [ISO 640], [ISO 800], [ISO 1000], [ISO 1250], [ISO 1600], [ISO 2000], [ISO 2500], [ISO 3200], [ISO 4000], [ISO 5000], [ISO 6400], [ISO 8000], [ISO 10000], [ISO 12800]

  (Factory setting: [ISO 1600])

[HIGH GAIN]

Sets the gain value to be assigned to the <H> position of the <GAIN> switch.

The items that can be set are as follows.

- When the [CAMERA] menu → [SW MODE] → [GAIN/ISO MODE] → [dB] is set
  - [–3dB]…[18dB]

  (Factory setting: [12dB])
- When the [CAMERA] menu → [SW MODE] → [GAIN/ISO MODE] → [ISO] is set
  - [ISO 400], [ISO 500], [ISO 640], [ISO 800], [ISO 1000], [ISO 1250], [ISO 1600], [ISO 2000], [ISO 2500], [ISO 3200], [ISO 4000], [ISO 5000], [ISO 6400], [ISO 8000], [ISO 10000], [ISO 12800]

  (Factory setting: [ISO 3200])

[SUPER GAIN]

Sets the super gain to be assigned to the USER button.

Toggles [24dB], [30dB], [36dB], and the normal gain in order each time the USER button is pressed or the USER button icon is touched when set to [ALL].

The items that can be set are as follows.

- [24dB], [30dB], [36dB], [ALL]

(Factory setting: [36dB])

NOTE

- This cannot be set when the [CAMERA] menu → [SW MODE] → [GAIN/ISO MODE] is set to [ISO].

[GAIN/ISO MODE]

Switches the unit for gain value.

The items that can be set are as follows.

- [dB], [ISO]

(Factory setting: [dB])

NOTE

- The setting is fixed to [dB] when the [SYSTEM] menu → [COLOR SETTING] is set to [NORMAL].

[O.I.S.]

Enables/disables the optical image stabilizer function.

If [O.I.S.] is assigned to the USER button, pressing the USER button switches [ON]/[OFF].

For details about optical image stabilizer, refer to “Optical image stabilizer function” (page 153).

[ON]	Enables the optical image stabilizer function.
[OFF]	Disables the optical image stabilizer function.

(Factory setting: [ON])

[HYBRID O.I.S.]

Enables/disables the hybrid optical image stabilizer function.

For details about optical image stabilizer, refer to “Optical image stabilizer function” (page 153).

[ON]	Enables the hybrid optical image stabilizer function.

[OFF]	Disables the hybrid optical image stabilizer function.

(Factory setting: [ON])

[O.I.S. MODE]

Switches the operation mode of the optical image stabilizer function.

Toggles [NORMAL], [PAN/TILT], and [STABLE] in order each time the USER button to which [O.I.S. MODE] is assigned is pressed or the USER button icon is touched.

[NORMAL]	Specifies the standard setting for a good balance of correction for large and small camera shake.
[PAN/TILT]	Specifies a setting appropriate for shooting that uses a lot of panning and tilting of the camera.
[STABLE]	Specifies a setting appropriate for fixing a composition to shoot a subject.

(Factory setting: [NORMAL])

[ATW]

Assigns the auto tracking white balance function to the <WHITE BAL> switch.

The items that can be set are as follows.

- [Ach], [Bch], [PRE], [OFF]

(Factory setting: [OFF])

[ATW SPEED]

Sets the control speed of the auto tracking white balance function.

The items that can be set are as follows.

- [FAST], [NORMAL], [SLOW]

(Factory setting: [NORMAL])

[ATW TARGET R]

Finely adjusts the Rch output for convergence with the auto tracking white balance operation.

The items that can be set are as follows.

- [–10]…[10]

(Factory setting: [0])

[ATW TARGET B]

Finely adjusts the Bch output for convergence with the auto tracking white balance operation.

The items that can be set are as follows.

- [–10]…[10]

(Factory setting: [0])

[W.BAL PRESET]

Sets the color temperature to be assigned to the <PRST> position of the <WHITE BAL> switch.

The items that can be set are as follows.

- [3200K], [5600K], [VAR]

(Factory setting: [3200K])

[W.BAL VAR]

Sets the value of [VAR] in [W.BAL PRESET].

The setting can also be operated by the multidial button.

Enabled when [W.BAL PRESET] is set to [VAR] and the <WHITE BAL> switch is at <PRST>.

The items that can be set are as follows.

- [2000K]…[15000K]

(Factory setting: [3200K])

[H.ZOOM SPEED]

Sets the zoom speed of the handle zoom.

The items that can be set are as follows.

- [1]…[99]

(Factory setting: [50])

[i.ZOOM]

Keeps the image quality while performing digital zoom.

[ON]	Enables the i.ZOOM function.
[OFF]	Disables the i.ZOOM function.

(Factory setting: [OFF])

[MF ASSIST]

Sets whether to adjust the last focus automatically when in the manual focus mode.

If the image is largely out of focus, the focus may not be adjusted properly.

[ON]	Adjusts the last focus automatically.

[OFF]	Does not adjust the focus automatically.

(Factory setting: [OFF])

[MACRO]

Enables/disables the focus macro function.
If functions are assigned to the USER buttons, [ON]/[OFF] can be switched using the USER button operations.

[ON]	Enables the focus macro function.
[OFF]	Disables the focus macro function.

(Factory setting: [OFF])

[AF AREA WIDTH]

Adjusts the width of the area enable for the auto focus to match the size of the subject.
The items that can be set are as follows.
- [ON], [OFF]

(Factory setting: [OFF])

[A.IRIS SPEED]

Sets the control speed of the auto iris level function.
The items that can be set are as follows.
- [FAST], [NORMAL], [SLOW]

(Factory setting: [NORMAL])

[A.IRIS WINDOW]

Selects the auto iris detection window.

[NORMAL1]	Window that is around center of the screen.
[NORMAL2]	Window that is around bottom of the screen.
[CENTER]	Window that is a spot around center of the screen.

(Factory setting: [NORMAL1])

[AREA MODE]

Assign the function that is performed within the area selected by touching the LCD monitor or pressing the <◀◀> button, <■> button, <▶▶> button, or <▶/❚❚> button while shooting.

[INHIBIT]	Disables assignment of functions.
[FOCUS]	Assigns the auto focus function.
[IRIS]	Assigns the auto iris function.
[Y GET]	Assigns the brightness display function.
[FOCUS/IRIS]	Assigns the simultaneous operation of the [FOCUS] and [IRIS].
[FOCUS/Y GET]	Assigns the simultaneous operation of the [FOCUS] and [Y GET].

(Factory setting: [INHIBIT])

[FACE DETECT/TRACKING MODE]

Switches the setting for the focus and the exposure correction for the face detection/tracking AE&AF function.

[FACE DETECT/TRACKING AF]	After a face is detected, the face is tracked while performing the auto focus.
[FACE DETECT/TRACKING AE&AF]	After a face is detected, the face is tracked while performing the auto focus and the exposure correction automatically.

(Factory setting: [FACE DETECT/TRACKING AE&AF])

[IR REC]

Enables/disables the IR recording.
The items that can be set are as follows.
- [ON], [OFF]

(Factory setting: [OFF])

NOTE

- The setting is fixed to [OFF] when the [SYSTEM] menu → [COLOR SETTING] is set to [V-Log].

[AUTO SW]

[A.IRIS]

Enables/disables the auto iris control.

[ON]	Performs the auto iris control operation when in auto mode. The <IRIS> button does not work.
[OFF]	Does not perform the auto iris control operation when in auto mode. This activates the iris control selected with the <IRIS> button.

(Factory setting: [ON])

[AGC]

Sets the auto gain control operations when [ON] is selected in [A.IRIS].

[ON]	Performs the operation of the [AGC] function that automatically adjusts camera gain when in auto mode.
[OFF]	Does not perform the operation of the [AGC] function that automatically adjusts camera gain when in auto mode.

(Factory setting: [ON])

NOTE

- The setting is fixed to [OFF] when the [CAMERA] menu → [SW MODE] → [GAIN/ISO MODE] is set to [ISO].

[AGC LIMIT]

Sets the maximum gain value during [AGC] operation.
The items that can be set are as follows.
- [3dB], [6dB], [12dB], [18dB]

(Factory setting: [6dB])

NOTE

- This cannot be set when the [CAMERA] menu → [SW MODE] → [GAIN/ISO MODE] is set to [ISO].

[AGC POINT]

Sets the F value to switch control from auto iris to [AGC] during [AGC] operation.
The items that can be set are as follows.
- [F4.0], [F5.6]

(Factory setting: [F4.0])

NOTE

- This cannot be set when the [CAMERA] menu → [SW MODE] → [GAIN/ISO MODE] is set to [ISO].

[A.SHUTTER]

Sets the auto shutter control operations when [ON] is selected in [A.IRIS].

[ON]	Performs the operation of the auto shutter when in auto mode.
[OFF]	Does not perform the operation of the auto shutter when in auto mode.

(Factory setting: [ON])

[A.SHUTTER LIMIT]

Sets the maximum shutter value during [A.SHUTTER] operation.
The items that can be set are as follows.
- [1/100], [1/120], [1/250]

(Factory setting: [1/250])

[A.SHUTTER POINT]

Sets the F value to switch control from auto iris to [A.SHUTTER] during [A.SHUTTER] operation.
The items that can be set are as follows.
- [F8.0], [F9.6]

(Factory setting: [F8.0])

[ATW]

Sets the operations of the auto tracking white balance function.

[ON]	Activates the auto tracking white balance function when in auto mode. The [ATW] function cannot be switched between enabled and disabled with the <WHITE BAL> switch or the USER buttons. However, if [ATW LOCK] is assigned to the USER button, the white balance value can be fixed with the USER button.
[OFF]	Does not perform the [ATW] function operation in auto mode. Performs the operation of the white balance function selected with the <WHITE BAL> switch.

(Factory setting: [ON])

[AF]

Sets the operation of the auto focus.

[ON]	Performs the operation of the auto focus when in auto mode. The <FOCUS> switch does not work.
[OFF]	Does not perform the operation of the auto focus when in auto mode. Performs the operation of the focus selected with the <FOCUS> switch.

(Factory setting: [ON])

[USER SW]

Sets the function to assign to the <USER 1> to <USER 7> buttons or the [USER8] to [USER12] button icons.
For details, refer to “Assigning function to the USER buttons” (page 51).

Following functions can be assigned to [USER1] to [USER12].

- [INHIBIT], [AWB], [DRS], [FBC], [ONE PUSH AF], [S.GAIN], [AREA], [AF AREA], [FACE DETECT], [ATW], [ATW LOCK], [SPOTLIGHT], [BACKLIGHT], [A.IRIS LEVEL], [IRIS], [Y GET], [FOCUS MACRO], [O.I.S.], [O.I.S. MODE], [i.ZOOM], [D.ZOOM], [IR REC], [FAST ZOOM], [ADAPTIVE MATRIX], [BARS], [PRE REC], [VFR], [SUPER SLOW], [REC CHECK], [BACKGR PAUSE], [DEL LAST CLIP], [SLOT SEL], [AUDIO CH1 LEVEL], [AUDIO CH2 LEVEL], [EXPAND], [PEAKING], [WFM], [ZEBRA], [LEVEL GAUGE], [LEVEL GAUGE SET], [LCD/VF HDR], [LCD/VF V-Log], [VF ON/OFF], [LCD/VF DETAIL], [AUDIO MON SEL], [AUDIO OUT], [MENU], [LOAD SETUP FILE], [LCD BACKLIGHT], [CARD READER MODE], [STREAMING START], [SHOT MARK]

[USER1]	Sets the function to assign to the <USER 1> button. (Factory setting: [O.I.S.])
[USER2]	Sets the function to assign to the <USER 2> button. (Factory setting: [ZEBRA])
[USER3]	Sets the function to assign to the <USER 3> button. (Factory setting: [WFM])
[USER4]	Sets the function to assign to the <USER 4> button. (Factory setting: [A.IRIS LEVEL])
[USER5]	Sets the function to assign to the <USER 5> button. (Factory setting: [SLOT SEL])
[USER6]	Sets the function to assign to the <USER 6> button. (Factory setting: [IRIS])
[USER7]	Sets the function to assign to the <USER 7> button. (Factory setting: [AWB])
[USER8]	Sets the function to assign to the [USER8] button icon. (Factory setting: [IR REC])
[USER9]	Sets the function to assign to the [USER9] button icon. (Factory setting: [FOCUS MACRO])
[USER10]	Sets the function to assign to the [USER10] button icon. (Factory setting: [AREA])
[USER11]	Sets the function to assign to the [USER11] button icon. (Factory setting: [ATW LOCK])
[USER12]	Sets the function to assign to the [USER12] button icon. (Factory setting: [MENU])

[SCENE FILE] menu

Sets the detailed image quality adjustment of the camera video.

This menu cannot be set when the thumbnail screen is displayed.

For the factory settings, refer to “Factory setting value of the scene file” (page 108).

[FILE SELECT]

Selects the scene file (1 to 6).

The items that can be set are as follows.

- [F1:], [F2:FLUO.], [F3:SPARK], [F4:B.STR], [F5:CINE], [F6:HLG]

[NAME EDIT]

Edits the name of the scene file selected in the scene file menu. (Maximum eight characters)

[LOAD/SAVE/INITIALIZE]

Loads/saves/initializes the setting values of the scene file assigned to the current scene file number (any one from 1 to 6).

[LOAD]	Selects and loads the scene file saved in the internal memory of the camera.
[SAVE]	Saves the current setting value as a scene file in the internal memory of the camera by specifying the title and the file number.
[INITIALIZE]	Initializes the selected scene files (1 to 6) to the factory settings.

[VFR]

Sets permission/prohibition of the variable frame rate (VFR).

The items that can be set are as follows.

- [ON], [OFF]

[FRAME RATE]

Switches the shooting interval and exposure time when [VFR] is [ON].

The items that can be set are as follows.

- When the [SYSTEM] menu → [FREQUENCY] → [59.94Hz] is set
  - [60fps], [54fps], [48fps], [44fps], [40fps], [36fps], [34fps], [32fps], [30fps], [28fps], [27fps], [26fps], [25fps], [24fps], [22fps], [21fps], [20fps], [18fps], [15fps], [12fps], [9fps], [6fps], [4fps], [2fps], [1fps]
- When the [SYSTEM] menu → [FREQUENCY] → [50.00Hz] is set
  - [50fps], [48fps], [45fps], [42fps], [37fps], [34fps], [32fps], [30fps], [28fps], [27fps], [26fps], [25fps], [24fps], [23fps], [22fps], [21fps], [20fps], [18fps], [15fps], [12fps], [9fps], [6fps], [4fps], [2fps], [1fps]

[SYNC SCAN TYPE]

Switches the synchro scan display settings.

[sec]	Displays in time.
[deg]	Displays in the shutter aperture angle.

[SYNC SCAN]

Displays the speed of the synchro scan shutter that is used when shooting video for television etc.
The items that can be set are as follows.

- When [SYNC SCAN TYPE] is set to [sec] and the [SYSTEM] menu → [FREQUENCY] → [59.94Hz] is set
  - 59.94i/59.94p mode: [1/60.0] … [1/7200]
  - 29.97p mode: [1/30.0]…[1/7200]
  - 23.98p mode: [1/24.0]…[1/7200]
- When [SYNC SCAN TYPE] is set to [sec] and the [SYSTEM] menu → [FREQUENCY] → [50.00Hz] is set
  - 50i/50p mode: [1/50.0]…[1/7200]
  - 25p mode: [1/25.0]…[1/7200]
- When [SYNC SCAN TYPE] is set to [deg]
  - [3.0d]…[360.0d]

[MASTER DTL]

Sets the level of the detail effect of the whole part.
The items that can be set are as follows.

- [–31]…[31]

NOTE

- This cannot be set when the [SYSTEM] menu → [COLOR SETTING] is set to [V-Log].

[DTL CORING]

Sets the level of signal (including noise) that does not activate the detail effect.
The items that can be set are as follows.

- [0]…[60]

NOTE

- This cannot be set when the [SYSTEM] menu → [COLOR SETTING] is set to [V-Log].

[DETAIL SETTING]

This cannot be set when the [SYSTEM] menu → [COLOR SETTING] is set to [V-Log].

[DETAIL]

Sets [ON]/[OFF] of the detail function.
The items that can be set are as follows.

- [ON], [OFF]

[V.DTL LEVEL]

Sets the intensity of the detail level in the vertical direction.
The items that can be set are as follows.

- [–7]…[7]

[DTL FREQ.]

Sets the thickness of the detail.
The items that can be set are as follows.

- [–7]…[7]

[LEVEL DEPEND.]

When the detail of luminosity signal is emphasized, details in the darker areas are compressed.
Details of bright areas are compressed more when the value set for [LEVEL DEPEND.] is larger.
The items that can be set are as follows.

- [–7]…[7]

[KNEE APE LVL]

Sets the detail level of high luminosity areas (high-brightness areas).
The items that can be set are as follows.

- [0]…[5]

[DTL GAIN(+)]

Sets the detail level of the plus direction (to make brighter).
The items that can be set are as follows.

- [–31]…[31]

[DTL GAIN(–)]

Sets the detail level of the minus direction (to make darker).

The items that can be set are as follows.

- [–31]…[31]

[SKIN TONE DTL A]

Selects the skin tone table that will display the skin tone detail.

Create the skin tone table with [DETECT TABLE]. You can shoot smoother skin tones by displaying the skin tone detail.

You can use only [SKIN TONE DTL A] or use a combination of [SKIN TONE DTL A] and [SKIN TONE DTL B] or a combination of [SKIN TONE DTL A] and [SKIN TONE DTL C].

The items that can be set are as follows.

- [ON], [OFF]

NOTE

- The setting is fixed to [OFF] when the [SYSTEM] menu → [COLOR SETTING] is set to [V-Log].

[SKIN TONE DTL B]

Selects the skin tone table that will display the skin tone detail.

Create the skin tone table with [DETECT TABLE]. You can shoot smoother skin tones by displaying the skin tone detail.

You can use only [SKIN TONE DTL B] or use a combination of [SKIN TONE DTL B] and [SKIN TONE DTL A] or a combination of [SKIN TONE DTL B] and [SKIN TONE DTL C].

The items that can be set are as follows.

- [ON], [OFF]

NOTE

- The setting is fixed to [OFF] when the [SYSTEM] menu → [COLOR SETTING] is set to [V-Log].

[SKIN TONE DTL C]

Selects the skin tone table that will display the skin tone detail.

Create the skin tone table with [DETECT TABLE]. You can shoot smoother skin tones by displaying the skin tone detail.

You can use only [SKIN TONE DTL C] or use a combination of [SKIN TONE DTL C] and [SKIN TONE DTL A] or a combination of [SKIN TONE DTL C] and [SKIN TONE DTL B].

The items that can be set are as follows.

- [ON], [OFF]

NOTE

- The setting is fixed to [OFF] when the [SYSTEM] menu → [COLOR SETTING] is set to [V-Log].

[SKIN TONE ZEBRA]

Set to display a zebra pattern in the skin tone area displayed in the viewfinder screen.

The zebra pattern is displayed when this item is set to [ON] and [SKIN TONE DTL A]/[SKIN TONE DTL B]/[SKIN TONE DTL C] is activated.

The zebra pattern displays the area selected in [SKIN TONE DTL SETTING].

The items that can be set are as follows.

- [ON], [OFF]

NOTE

- The setting is fixed to [OFF] when the [SYSTEM] menu → [COLOR SETTING] is set to [V-Log].

[SKIN TONE DTL SETTING]

This cannot be set when the [SYSTEM] menu → [COLOR SETTING] is set to [V-Log].

[DETECT TABLE]

Selects the skin tone table of the subject that displays the skin tone detail.

The items that can be set are as follows.

- [A], [B], [C]

[SKIN DTL EFFECT]

Sets the effective level of the skin tone detail.

The items that can be set are as follows.

- [0]…[31]

[I CENTER]

Sets the center position of the upper I axis (setting the area that applies the skin tone).

The items that can be set are as follows.

- [0]…[255]

[I WIDTH]

Sets the width of the area that displays the skin tone of the upper I axis that focus on [I CENTER].

The items that can be set are as follows.
- [1]…[3]

[Q WIDTH]

Sets the width of the area that displays the skin tone of the upper Q axis that focus on [I CENTER].
The items that can be set are as follows.
- [1]…[3]

[Q PHASE]

Sets the phase of the area that applies the skin tone related to the Q axis.
The items that can be set are as follows.
- [–128]…[127]

[RB GAIN CONTROL SETTING]

[R GAIN AWB PRE]

Sets the Rch gain when the <WHITE BAL> switch is at the <PRST> position.
The items that can be set are as follows.
- [–200]…[200]

[B GAIN AWB PRE]

Sets the Bch gain when the <WHITE BAL> switch is at the <PRST> position.
The items that can be set are as follows.
- [–200]…[200]

[R GAIN AWB A]

Sets the Rch gain when the <WHITE BAL> switch is at the <A> position.
The items that can be set are as follows.
- [–200]…[200]

[B GAIN AWB A]

Sets the Bch gain when the <WHITE BAL> switch is at the <A> position.
The items that can be set are as follows.
- [–200]…[200]

[R GAIN AWB B]

Sets the Rch gain when the <WHITE BAL> switch is at the <B> position.
The items that can be set are as follows.
- [–200]…[200]

[B GAIN AWB B]

Sets the Bch gain when the <WHITE BAL> switch is at the <B> position.
The items that can be set are as follows.
- [–200]…[200]

[AWB A GAIN OFFSET]

Sets the Rch gain and Bch gain when the <WHITE BAL> switch is at the <A> position and automatic white balance is performed.

[ON]	Keeps the values set in [R GAIN AWB A] and [B GAIN AWB A].
[OFF]	Sets the value of Rch gain and Bch gain to [0].

[AWB B GAIN OFFSET]

Sets the Rch gain and Bch gain when the <WHITE BAL> switch is at the <B> position and automatic white balance is performed.

[ON]	Keeps the values set in [R GAIN AWB B] and [B GAIN AWB B].
[OFF]	Sets the value of Rch gain and Bch gain to [0].

[COLOR TEMP Ach SETTING]

[COLOR TEMP]

Displays the color temperature when the <WHITE BAL> switch is at the <A> position and automatic white balance is working, or when it is preset.
Also, in automatic white balance operation, the color temperature can be changed by changing the output balance of Rch and Bch.
The items that can be set are as follows.
- [2000K]…[15000K]

[R GAIN]

Displays the output of Rch when the <WHITE BAL> switch is at the <A> position and automatic white balance is working, or when it is preset.
In the automatic white balance operation, the color can also be changed on the Rch axis by changing the output of Rch.
The items that can be set are as follows.
- [–400]…[400]

[B GAIN]

Displays the output of Bch when the <WHITE BAL> switch is at the <A> position and automatic white balance is working, or when it is preset.
In automatic white balance operation, the color can also be changed on the Bch axis by changing the output of Bch.
The items that can be set are as follows.

- [–400]…[400]

[G AXIS]

Displays the output of G axis when the <WHITE BAL> switch is at the <A> position and automatic white balance is working, or when it is preset.
In the automatic white balance operation, the color can also be changed on the G axis by changing the output of Rch and Bch.
The items that can be set are as follows.

- [–400]…[400]

[COLOR TEMP Bch SETTING]

[COLOR TEMP]

Displays the color temperature when the <WHITE BAL> switch is at the <B> position and automatic white balance is working, or when it is preset.
Also, in automatic white balance operation, the color temperature can be changed by changing the output balance of Rch and Bch.
The items that can be set are as follows.

- [2000K]…[15000K]

[R GAIN]

Displays the output of Rch when the <WHITE BAL> switch is at the <B> position and automatic white balance is working, or when it is preset.
In automatic white balance operation, the color can also be changed on the Rch axis by changing the output of Rch.
The items that can be set are as follows.

- [–400]…[400]

[B GAIN]

Displays the output of Bch when the <WHITE BAL> switch is at the <B> position and automatic white balance is working, or when it is preset.
In automatic white balance operation, the color can also be changed on the Bch axis by changing the output of Bch.
The items that can be set are as follows.

- [–400]…[400]

[G AXIS]

Displays the output of G axis when the <WHITE BAL> switch is at the <B> position and automatic white balance is working, or when it is preset.
In the automatic white balance operation, the color can also be changed on the G axis by changing the output of Rch and Bch.
The items that can be set are as follows.

- [–400]…[400]

[CHROMA LEVEL]

Sets the chroma level of P_R and P_B signals.
The items that can be set are as follows.

- [–99%]…[99%], [OFF]

NOTE

- This cannot be set when the [SYSTEM] menu → [COLOR SETTING] is set to [V-Log].

[CHROMA PHASE]

Finely adjusts the chroma phase of the P_R signal and P_B signal.
The items that can be set are as follows.

- [–31]…[31]

NOTE

- This cannot be set when the [SYSTEM] menu → [COLOR SETTING] is set to [V-Log].

[MATRIX]

This cannot be set when the [SYSTEM] menu → [COLOR SETTING] is set to [V-Log].

[MATRIX TYPE]

Selects the matrix table to display the color for shooting.

[NORMAL1]	Displays the color suitable for shooting outdoors or under a halogen lamp.
[NORMAL2]	Displays more vivid color than [NORMAL1].
[FLUO.]	Displays the color suitable for shooting indoors under fluorescent light.
[CINELIKE]	Displays the color suitable for shooting cinematic video.

[ADAPTIVE MATRIX]

Enables/disables the function to control the linear matrix in accordance with the shooting condition.
If [ADAPTIVE MATRIX] is assigned to the USER button, pressing the USER button switches [ON]/[OFF].

The items that can be set are as follows.
- [ON], [OFF]

[MATRIX SETTING]

This cannot be set when the [SYSTEM] menu → [COLOR SETTING] is set to [V-Log].

[R-G]

Adjusts the linear matrix. (Red - Green)
The items that can be set are as follows.
- [–63]…[63]

[R-B]

Adjusts the linear matrix. (Red - Blue)
The items that can be set are as follows.
- [–63]…[63]

[G-R]

Adjusts the linear matrix. (Green - Red)
The items that can be set are as follows.
- [–63]…[63]

[G-B]

Adjusts the linear matrix. (Green - Blue)
The items that can be set are as follows.
- [–63]…[63]

[B-R]

Adjusts the linear matrix. (Blue - Red)
The items that can be set are as follows.
- [–63]…[63]

[B-G]

Adjusts the linear matrix. (Blue - Green)
The items that can be set are as follows.
- [–63]…[63]

[COLOR CORRECTION]

This cannot be set when the [SYSTEM] menu → [COLOR SETTING] is set to [V-Log].

[R] ([SAT])

Corrects red color saturation.
The items that can be set are as follows.
- [–63]…[63]

[R] ([PHASE])

Corrects the red hue.
The items that can be set are as follows.
- [–63]…[63]

[R-R-Mg] ([SAT])

Corrects the color saturation between red and “colors between red and magenta”.
The items that can be set are as follows.
- [–63]…[63]

[R-R-Mg] ([PHASE])

Corrects the hue between red and “colors between red and magenta”.
The items that can be set are as follows.
- [–63]…[63]

[R-Mg] ([SAT])

Corrects the color saturation between red and magenta.
The items that can be set are as follows.
- [–63]…[63]

[R-Mg] ([PHASE])

Corrects the hue between red and magenta.
The items that can be set are as follows.
- [–63]…[63]

[Mg] ([SAT])

Corrects magenta color saturation.
The items that can be set are as follows.
- [–63]…[63]

[Mg] ([PHASE])

Corrects the magenta hue.
The items that can be set are as follows.
- [–63]…[63]

[Mg-B] ([SAT])

Corrects the color saturation between magenta and blue.
The items that can be set are as follows.
- [–63]…[63]

[Mg-B] ([PHASE])

Corrects the hue between magenta and blue.
The items that can be set are as follows.
- [–63]…[63]

[B] ([SAT])

Corrects blue color saturation.
The items that can be set are as follows.
- [–63]…[63]

[B] ([PHASE])

Corrects the blue hue.
The items that can be set are as follows.
- [–63]…[63]

[B-Cy] ([SAT])

Corrects the color saturation between blue and cyan.
The items that can be set are as follows.
- [–63]…[63]

[B-Cy] ([PHASE])

Corrects the hue between blue and cyan.
The items that can be set are as follows.
- [–63]…[63]

[Cy] ([SAT])

Corrects cyan color saturation.
The items that can be set are as follows.
- [–63]…[63]

[Cy] ([PHASE])

Corrects the cyan hue.
The items that can be set are as follows.
- [–63]…[63]

[Cy-G] ([SAT])

Corrects the color saturation between cyan and green.
The items that can be set are as follows.
- [–63]…[63]

[Cy-G] ([PHASE])

Corrects the hue between cyan and green.
The items that can be set are as follows.
- [–63]…[63]

[G] ([SAT])

Corrects green color saturation.
The items that can be set are as follows.
- [–63]…[63]

[G] ([PHASE])

Corrects the green hue.
The items that can be set are as follows.
- [–63]…[63]

[G-YI] ([SAT])

Corrects the color saturation between green and yellow.
The items that can be set are as follows.
- [–63]…[63]

[G-YI] ([PHASE])

Corrects the hue between green and yellow.
The items that can be set are as follows.
- [–63]…[63]

[G-YI-YI] ([SAT])

Corrects the color saturation between “colors between green and yellow” and yellow.
The items that can be set are as follows.
- [–63]…[63]

[G-YI-YI] ([PHASE])

Corrects the hue between “colors between green and yellow” and yellow.
The items that can be set are as follows.
- [–63]…[63]

[YI] ([SAT])

Corrects yellow color saturation.
The items that can be set are as follows.
- [–63]…[63]

[YI] ([PHASE])

Corrects the yellow hue.
The items that can be set are as follows.
- [–63]…[63]

[YI-YI-R] ([SAT])

Corrects the color saturation between yellow and “colors between yellow and red”.
The items that can be set are as follows.
- [–63]…[63]

[YI-YI-R] ([PHASE])

Corrects the hue between yellow and “colors between yellow and red”.
The items that can be set are as follows.
- [–63]…[63]

[YI-R] ([SAT])

Corrects the color saturation between yellow and red.
The items that can be set are as follows.
- [–63]…[63]

[YI-R] ([PHASE])

Corrects the hue between yellow and red.
The items that can be set are as follows.
- [–63]…[63]

[YI-R-R] ([SAT])

Corrects the color saturation between “colors between yellow and red” and red.
The items that can be set are as follows.
- [–63]…[63]

[YI-R-R] ([PHASE])

Corrects the hue between “colors between yellow and red” and red.
The items that can be set are as follows.
- [–63]…[63]

[MASTER PED]

Sets the master pedestal.
The items that can be set are as follows.
- [–200]…[200]

NOTE

- This cannot be set when the [SYSTEM] menu → [COLOR SETTING] is set to [V-Log].

[RGB BLACK CONTROL SETTING]

This cannot be set when the [SYSTEM] menu → [COLOR SETTING] is set to [V-Log].

[R PED]

Sets the Rch pedestal level.
The items that can be set are as follows.
- [–100]…[100]

[G PED]

Sets the Gch pedestal level.
The items that can be set are as follows.
- [–100]…[100]

[B PED]

Sets the Bch pedestal level.
The items that can be set are as follows.
- [–100]…[100]

[PEDESTAL OFFSET]

Sets the Rch, Gch, and Bch pedestal levels after adjusting the automatic black balance.

[ON]	Keeps each of the values set in [R PED], [G PED], and [B PED].
[OFF]	Sets the pedestal level of Rch, Gch, and Bch to [0].

[GAMMA MODE SEL]

Selects the gamma mode.

[HD]	Sets the gamma characteristics for HD (High Definition).
[SD]	Increases gain in darker areas more than HD gamma.
[FILMLIKE1]	Sets the characteristics that reproduce more highlight areas compared to HD gamma.
[FILMLIKE2]	Sets the characteristics that reproduce more highlight areas compared to [FILMLIKE1].
[FILMLIKE3]	Sets the characteristics that reproduce more highlight areas compared to [FILMLIKE2].
[FILM-REC]	Sets the cine gamma characteristics for film.
[VIDEO-REC]	Sets the cine gamma characteristics for video.
[HLG]	Sets the hybrid log gamma (HLG) characteristics.

NOTE

- This cannot be set when the [SYSTEM] menu → [COLOR SETTING] is set to [V-Log].

[GAMMA SETTING]

This cannot be set when the [SYSTEM] menu → [COLOR SETTING] is set to [V-Log].

[MASTER GAMMA]

Sets the master gamma in 0.01 steps.
The items that can be set are as follows.
- [0.30]…[0.75]

[F-REC DYNAMIC LVL]

When [FILM-REC] is selected in [GAMMA MODE SEL], dynamic range is set.
No settings are changed if an item other than [FILM-REC] is selected.
The items that can be set are as follows.
- [200%] … [600%] (100% step)

[F-REC BLACK STR LVL]

When [FILM-REC] is selected in [GAMMA MODE SEL], black stretch is set.
No settings are changed if an item other than [FILM-REC] is selected.
The items that can be set are as follows.
- [0%]…[30%]

[V-REC KNEE SLOPE]

When [VIDEO-REC] is selected in [GAMMA MODE SEL], knee slope is set.
No settings are changed if an item other than [VIDEO-REC] is selected.
The items that can be set are as follows.
- [150%] … [500%] (50% step)

[V-REC KNEE POINT]

When [VIDEO-REC] is selected in [GAMMA MODE SEL], knee point is set.
No settings are changed if an item other than [VIDEO-REC] is selected.
The items that can be set are as follows.
- [30%]…[107%]

[BLACK GAMMA]

Sets the gamma curves of dark areas.

[–8]…[–1]	Compresses the dark area.
[0]	Standard state
[1]…[8]	Expands dark areas.

[B.GAMMA RANGE]

Sets the maximum level of compression/expansion.

[1]	Around 20%
[2]	Around 30%
[3]	Around 40%

[KNEE SETTING]

This cannot be set when the [SYSTEM] menu → [COLOR SETTING] is set to [V-Log].

[KNEE MODE]

Sets the knee operation mode.
The items that can be set are as follows.
- [AUTO], [MANUAL], [OFF]

[A.KNEE RESPONSE]

Sets the auto knee response speed. The smaller the setting value, the faster the response speed is.
The items that can be set are as follows.
- [1]…[8]

[KNEE POINT]

Sets the knee point position in 0.5% steps.
The items that can be set are as follows.
- [70.0%]…[107.0%]

[KNEE SLOPE]

Sets the knee inclination.
The items that can be set are as follows.
- [0]…[99]

[HLG KNEE SW]

Enables/disables the operation of knee for HLG.
The items that can be set are as follows.
- [ON], [OFF]

[HLG KNEE POINT]

Sets the position of the knee point for HLG.
The items that can be set are as follows.
- [55]…[100]

[HLG KNEE SLOPE]

Sets the inclination of knee for HLG.
The items that can be set are as follows.
- [0]…[100]

[WHITE CLIP SETTING]

This cannot be set when the [SYSTEM] menu → [COLOR SETTING] is set to [V-Log].

[WHITE CLIP]

Turns the white clip function [ON]/[OFF]. The setting value of [WHITE CLIP LEVEL] is enabled when the function is [ON].
The items that can be set are as follows.
- [ON], [OFF]

[WHITE CLIP LEVEL]

Sets the white clip level.
The items that can be set are as follows.
- [90%]…[109%]

[DRS]

Enables/disables the dynamic range stretcher function.
If functions are assigned to the USER buttons, [ON]/[OFF] can be switched using the USER button operations.

The items that can be set are as follows.

- [ON], [OFF]

NOTE

- The setting is fixed to [OFF] when the [SYSTEM] menu → [COLOR SETTING] is set to [V-Log].

[DRS EFFECT DEPTH]

Sets the compression level of the high luminosity areas of the dynamic range stretcher function.
By compressing the video signal levels of the high luminosity areas that are blown out in normal shooting, the dynamic range can be expanded.
The items that can be set are as follows.

- [1]…[3]

NOTE

- This cannot be set when the [SYSTEM] menu → [COLOR SETTING] is set to [V-Log].

[DNR]

Changes the noise reduction setting and adjusts the noise reduction effect.
The items that can be set are as follows.

- [OFF], [1], [2]

[A.IRIS LEVEL]

Enables/disables the auto iris level function.
If functions are assigned to the USER buttons, [ON]/[OFF] can be switched using the USER button operations.
The items that can be set are as follows.

- [ON], [OFF]

[A.IRIS LEVEL EFFECT]

Adjusts the brightness in the auto iris mode.
Increase the value to brighten, and decrease the value to darken the convergence of auto iris.
The items that can be set are as follows.

- [–50]…[50]

[AUDIO] menu

Sets the input/output function of audio.

[INPUT SETTINGS]

[INPUT1 MIC LEVEL]

Sets the input level of the external microphone connected to the <AUDIO INPUT 1> terminal. Enabled when the external microphone is connected and the <INPUT1> switch is set to <MIC> or <+48V>.
The items that can be set are as follows.

- [–40dB], [–50dB], [–60dB]

(Factory setting: [–50dB])

[INPUT2 MIC LEVEL]

Sets the input level of the external microphone connected to the <AUDIO INPUT 2> terminal. Enabled when the external microphone is connected and the <INPUT2> switch is set to <MIC> or <+48V>.
The items that can be set are as follows.

- [–40dB], [–50dB], [–60dB]

(Factory setting: [–50dB])

[INPUT1 LINE LEVEL]

Sets the audio input level of the audio device connected to the <AUDIO INPUT 1> terminal. Enabled when the audio device is connected and the <INPUT1> switch is set to <LINE>.
The items that can be set are as follows.

- [4dB], [0dB]

(Factory setting: [0dB])

[INPUT2 LINE LEVEL]

Sets the audio input level of the audio device connected to the <AUDIO INPUT 2> terminal. Enabled when the audio device is connected and the <INPUT2> switch is set to <LINE>.
The items that can be set are as follows.

- [4dB], [0dB]

(Factory setting: [0dB])

[REC CH SETTINGS]

[CH1 LEVEL]

Sets if the recording level adjustment method for audio channel 1 is to be automatic or manual.
If [AUDIO CH1 LEVEL] is assigned to the USER button, pressing the USER button switches [AUTO]/[MANUAL].
The items that can be set are as follows.
- [AUTO], [MANUAL]

(Factory setting: [AUTO])

[CH2 LEVEL]

Sets if the recording level adjustment method for audio channel 2 is to be automatic or manual.
If [AUDIO CH2 LEVEL] is assigned to the USER button, pressing the USER button switches [AUTO]/[MANUAL].
The items that can be set are as follows.
- [AUTO], [MANUAL]

(Factory setting: [AUTO])

[CH3 LEVEL]

Sets if the recording level adjustment method for audio channel 3 is to be automatic or manual.
The items that can be set are as follows.
- [AUTO], [MANUAL]

(Factory setting: [AUTO])

[CH4 LEVEL]

Sets if the recording level adjustment method for audio channel 4 is to be automatic or manual.
The items that can be set are as follows.
- [AUTO], [MANUAL]

(Factory setting: [AUTO])

[CH3 LEVEL CONTROL]

The recording level can be manually adjusted when [CH3 LEVEL] adjusting the recording level of the audio channel 3 is set to [MANUAL].
The items that can be set are as follows.
- [0]…[100]

(Factory setting: [70])

[CH4 LEVEL CONTROL]

The recording level can be manually adjusted when [CH4 LEVEL] adjusting the recording level of the audio channel 4 is set to [MANUAL].
The items that can be set are as follows.
- [0]…[100]

(Factory setting: [70])

[CH1 MIC LOWCUT]

Enables/disables the lowcut filter for audio channel 1.
The items that can be set are as follows.
- [ON], [OFF]

(Factory setting: [OFF])

[CH2 MIC LOWCUT]

Enables/disables the lowcut filter for audio channel 2.
The items that can be set are as follows.
- [ON], [OFF]

(Factory setting: [OFF])

[CH3 MIC LOWCUT]

Enables/disables the lowcut filter for audio channel 3.
The items that can be set are as follows.
- [ON], [OFF]

(Factory setting: [OFF])

[CH4 MIC LOWCUT]

Enables/disables the lowcut filter for audio channel 4.
The items that can be set are as follows.
- [ON], [OFF]

(Factory setting: [OFF])

[CH1 LIMITER]

Enables/disables the limiter when the method to adjust the audio input level for audio channel 1 is manual.
The items that can be set are as follows.
- [ON], [OFF]

(Factory setting: [OFF])

[CH2 LIMITER]

Enables/disables the limiter when the method to adjust the audio input level for audio channel 2 is manual.
The items that can be set are as follows.
- [ON], [OFF]

(Factory setting: [OFF])

[CH3 LIMITER]

Enables/disables the limiter when the method to adjust the audio input level for audio channel 3 is manual.
The items that can be set are as follows.
- [ON], [OFF]

(Factory setting: [OFF])

[CH4 LIMITER]

Enables/disables the limiter when the method to adjust the audio input level for audio channel 4 is manual.
The items that can be set are as follows.
- [ON], [OFF]

(Factory setting: [OFF])

[HEAD ROOM]

Sets the headroom (standard level).
The items that can be set are as follows.
- [12dB], [18dB], [20dB]

(Factory setting: [18dB])

[OUTPUT SETTINGS]

[AUDIO OUT]

Sets the audio channel and the format to output from the <AV OUT> terminal, the headphone terminal, and the built-in speaker.
If [AUDIO OUT] is assigned to the USER button, pressing the USER button switches the setting.
When [CH1]/[CH2]/[CH1/2 STEREO]/[CH1/2 MIX] is set, toggles [CH1], [CH2], [CH1/2 STEREO], and [CH1/2 MIX] in order. When [CH3]/[CH4]/[CH3/4 STEREO]/[CH3/4 MIX] is set, toggles [CH3], [CH4], [CH3/4 STEREO], and [CH3/4 MIX] in order.

[CH1]	Outputs the signal for audio channel 1 as monaural.
[CH2]	Outputs the signal for audio channel 2 as monaural.
[CH1/2 STEREO]	Outputs the signals of the audio channel 1 and the audio channel 2 as stereo. Outputs as monaural from the built-in speaker.
[CH1/2 MIX]	Mixes the signals of the audio channel 1 and the audio channel 2 and outputs as monaural.
[CH3]	Outputs the signal for audio channel 3 as monaural. When [FILE FORMAT] is set to [AVCHD], it will operate in [CH1].
[CH4]	Outputs the signal for audio channel 4 as monaural. When [FILE FORMAT] is set to [AVCHD], it will operate in [CH2].
[CH3/4 STEREO]	Outputs the signals of the audio channel 3 and the audio channel 4 as stereo. Outputs as monaural from the built-in speaker. When [FILE FORMAT] is set to [AVCHD], it will operate in [CH1/2 STEREO].
[CH3/4 MIX]	Mixes the signals of the audio channel 3 and the audio channel 4 and outputs as monaural. When [FILE FORMAT] is set to [AVCHD], it will operate in [CH1/2 MIX].

(Factory setting: [CH1/2 STEREO])

[HDMI OUT CH]

Selects the audio channel to be output from the <HDMI> terminal.

[CH1/2]	Outputs the audio signals of the audio channel 1 and the audio channel 2 as stereo.
[CH3/4]	Outputs the audio signals of the audio channel 3 and the audio channel 4 as stereo.
[CH1/2/3/4]	Outputs the audio signals of the audio channels 1 to 4 as 4 channels.

(Factory setting: [CH1/2])

NOTE

- The setting is fixed to [CH1/2] when the [SYSTEM] menu → [FILE FORMAT] is set to [AVCHD].

[ALARM]

[BATTERY END]

Sets whether to sound the alarm when the remaining battery level is exhausted.
The items that can be set are as follows.
- [HIGH], [MED], [LOW], [OFF]

(Factory setting: [OFF])

[MEDIA END]

Sets whether to sound the alarm when the remaining recording capacity of the memory card is exhausted.
The items that can be set are as follows.
- [HIGH], [MED], [LOW], [OFF]

(Factory setting: [OFF])

[WARNING]

Sets whether to sound the alarm when a system error or warning occurs.
The items that can be set are as follows.
- [HIGH], [MED], [LOW], [OFF]

(Factory setting: [OFF])

[VIDEO OUT/LCD/VF] menu

Configures the settings for the external output, the information to display in the LCD monitor or viewfinder and the output format.

[VIDEO OUT SEL]

Switches the external output destination of the audio file.

[SDI+HDMI]	Outputs from the <SDI OUT> terminal and the <HDMI> terminal.
[AV+HDMI]	Outputs from the <AV OUT> terminal and the <HDMI> terminal.

(Factory setting: [SDI+HDMI])

[SDI OUT]

[OUTPUT SW]

Enables/disables the output from the <SDI OUT> terminal.

[ON]	Outputs the video.
[OFF]	Does not output the video.

(Factory setting: [ON])

[OUT FORMAT]

Selects the signal to output from the <SDI OUT> terminal. The items that can be selected differ depending on the [SYSTEM] menu → [FREQUENCY]/[FILE FORMAT]/[REC FORMAT] setting.

[1920×1080p]	Outputs in 1920×1080p.
[1920×1080i]	Outputs in 1920×1080i.
[1920×1080PsF]	Outputs in 1920×1080PsF.
[1280×720p]	Outputs in 1280×720p.
[720×480i]	Outputs in 720×480i.
[720×576i]	Outputs in 720×576i.

(Factory setting: [1920×1080i])

NOTE

- For the combinations that can be set, refer to “Format that can be output from the <SDI OUT> terminal” (page 173).

[3G-SDI OUT]

Sets the format of the 3G SDI signal output from the <SDI OUT> terminal. Can be set when the 3G SDI signal is output.

[LEVEL-A]	Selects the LEVEL-A method.
[LEVEL-B]	Selects the LEVEL-B DL method.

(Factory setting: [LEVEL-B])

[SD-SDI EDH]

Sets whether to superimpose EDH when output from the <SDI OUT> terminal is the SD signal (480i and 576i).

[ON]	Superimposes.
[OFF]	Does not superimpose.

(Factory setting: [ON])

[SDI REC REMOTE]

Sets if the recording operation against the external equipment connected to the <SDI OUT> terminal (such as recorder) is to be controlled or not.

[ON]	Controls the recording operation of the external equipment.
[OFF]	Does not control the recording operation of the external equipment.

(Factory setting: [OFF])

NOTE

- This cannot be set when the [RECORDING] menu → [REC FUNCTION] → [REC MODE] is set to [INTERVAL].

[SDI OUT CHAR]

Sets whether to superimpose the character to the output from the <SDI OUT> terminal.

[ON]	Superimposes.

[OFF]	Does not superimpose.

(Factory setting: [OFF])

[SDI OUT ZEBRA]

Sets whether to superimpose the zebra signal to the output from the <SDI OUT> terminal. The settings of the zebra signal follow the zebra signal settings in the [VIDEO OUT/LCD/VF] menu → [EI ASSIST].

[ON]	Superimposes.
[OFF]	Does not superimpose.

(Factory setting: [OFF])

NOTE

- The setting is fixed to [OFF] when the [SYSTEM] menu → [COLOR SETTING] is set to [V-Log].

[SDI OUT HDR]

Sets the output image from the <SDI OUT> terminal.

[SDR]	Outputs in the standard dynamic range.
[HDR]	Outputs in the high dynamic range.

(Factory setting: [HDR])

NOTE

- The setting is fixed to [SDR] when set to following menu.
  - [SYSTEM] menu → [REC FORMAT] → [480-59.94i/AVCHD SA]
  - [SYSTEM] menu → [REC FORMAT] → [576-50.00i/AVCHD SA]
  - [VIDEO OUT/LCD/VF] menu → [SDI OUT] → [OUT FORMAT] → [720×480i]
  - [VIDEO OUT/LCD/VF] menu → [SDI OUT] → [OUT FORMAT] → [720×576i]
- When the [SCENE FILE] menu → [GAMMA MODE SEL] is set to anything other than [HLG], the camera image is output in the standard dynamic range.
- This cannot be set when the [SYSTEM] menu → [COLOR SETTING] is set to [V-Log].

[SDI OUT V-Log]

Sets the output image from the <SDI OUT> terminal when the [SYSTEM] menu → [COLOR SETTING] is set to [V-Log].

[V-Log]	Outputs in same color as the recording image.
[V-709]	Outputs in a converted color equivalent to standard CINE-LIKE. Setting suitable for a preview.

(Factory setting: [V-Log])

NOTE

- The setting is fixed to [V-709] when set to the following menu.
  - [SYSTEM] menu → [REC FORMAT] → [480-59.94i/AVCHD SA]
  - [SYSTEM] menu → [REC FORMAT] → [576-50.00i/AVCHD SA]
  - [VIDEO OUT/LCD/VF] menu → [SDI OUT] → [OUT FORMAT] → [720×480i]
  - [VIDEO OUT/LCD/VF] menu → [SDI OUT] → [OUT FORMAT] → [720×576i]
- This cannot be set when the [SYSTEM] menu → [COLOR SETTING] is set to [NORMAL].

[HDMI OUT]

[OUT FORMAT]

Selects the signal to output from the <HDMI> terminal. The items that can be selected differ depending on the [SYSTEM] menu → [FREQUENCY]/[FILE FORMAT]/[REC FORMAT] setting.

[3840×2160p]	Outputs in 3840×2160p (4:2:2/10-bit).
[3840×2160p(420/8bit)]	Outputs in 3840×2160p (4:2:0/8-bit).
[1920×1080p]	Outputs in 1920×1080p.
[1920×1080i]	Outputs in 1920×1080i.
[1280×720p]	Outputs in 1280×720p.
[720×480p]	Outputs in 720×480p.
[720×576p]	Outputs in 720×576p.

(Factory setting: [1920×1080p])

NOTE

- For the combinations that can be set, refer to “Format that can be output from the <HDMI> terminal” (page 173).

[HDMI TC OUT]

Sets if the time code information is output or not in the output from the <HDMI> terminal.

The items that can be set are as follows.

- [ON], [OFF]

(Factory setting: [OFF])

[HDMI REC REMOTE]

Sets if the recording operation against the external equipment connected to the <HDMI> terminal (such as recorder) is to be controlled or not. This can be set when [HDMI TC OUT] in [HDMI OUT] is enabled.

[ON]	Controls the recording operation of the external equipment.
[OFF]	Does not control the recording operation of the external equipment.

(Factory setting: [OFF])

NOTE

- This cannot be set when the [RECORDING] menu → [REC FUNCTION] → [REC MODE] is set to [INTERVAL].

[HDMI OUT CHAR]

Sets whether to superimpose the character to the output from the <HDMI> terminal.

[ON]	Superimposes.
[OFF]	Does not superimpose.

(Factory setting: [OFF])

[HDMI OUT ZEBRA]

Sets whether to superimpose the zebra signal to the output from the <HDMI> terminal. The settings of the zebra signal follow the zebra signal settings in the [VIDEO OUT/LCD/VF] menu → [EI ASSIST].

[ON]	Superimposes.
[OFF]	Does not superimpose.

(Factory setting: [OFF])

NOTE

- The setting is fixed to [OFF] when the [SYSTEM] menu → [COLOR SETTING] is set to [V-Log].

[HDMI OUT HDR]

Sets the output image from the <HDMI> terminal.

[SDR]	Outputs in the standard dynamic range.
[HDR]	Outputs in the high dynamic range.

(Factory setting: [HDR])

NOTE

- The setting is fixed to [SDR] when set to following menu.
  - [SYSTEM] menu → [REC FORMAT] → [480-59.94i/AVCHD SA]
  - [SYSTEM] menu → [REC FORMAT] → [576-50.00i/AVCHD SA]
  - [VIDEO OUT/LCD/VF] menu → [HDMI OUT] → [OUT FORMAT] → [720×480p]
  - [VIDEO OUT/LCD/VF] menu → [HDMI OUT] → [OUT FORMAT] → [720×576p]
- When the [SCENE FILE] menu → [GAMMA MODE SEL] is set to anything other than [HLG], the camera image is output in the standard dynamic range.
- This cannot be set when the [SYSTEM] menu → [COLOR SETTING] is set to [V-Log].

[HDMI OUT V-Log]

Sets the output image from the <HDMI> terminal when the [SYSTEM] menu → [COLOR SETTING] is set to [V-Log].

[V-Log]	Outputs in same color as the recording image.
[V-709]	Outputs in a converted color equivalent to standard CINE-LIKE. Setting suitable for a preview.

(Factory setting: [V-Log])

NOTE

- The setting is fixed to [V-709] when set to the following menu.
  - [SYSTEM] menu → [REC FORMAT] → [480-59.94i/AVCHD SA]
  - [SYSTEM] menu → [REC FORMAT] → [576-50.00i/AVCHD SA]
  - [VIDEO OUT/LCD/VF] menu → [HDMI OUT] → [OUT FORMAT] → [720×480p]
  - [VIDEO OUT/LCD/VF] menu → [HDMI OUT] → [OUT FORMAT] → [720×576p]
- This cannot be set when the [SYSTEM] menu → [COLOR SETTING] is set to [NORMAL].

[AV OUT]

[OUTPUT SW]

Enables/disables the output from the <AV OUT> terminal.

[ON]	Outputs the video and audio.
[OFF]	Does not output the video and audio.

(Factory setting: [ON])

[AV OUT CHAR]

Sets whether to superimpose the character to the output from the <AV OUT> terminal.

[ON]	Superimposes.
[OFF]	Does not superimpose.

(Factory setting: [ON])

[AV OUT ZEBRA]

Sets whether to superimpose the zebra signal to the output from the <AV OUT> terminal. The settings of the zebra signal follow the settings in the [VIDEO OUT/LCD/VF] menu → [EI ASSIST] → [ZEBRA].

[ON]	Superimposes.
[OFF]	Does not superimpose.

(Factory setting: [OFF])

NOTE

- The setting is fixed to [OFF] when the [SYSTEM] menu → [COLOR SETTING] is set to [V-Log].

[SD DOWNCON MODE]

Sets the mode of the SD down converter output signal from an external output terminal.

[SIDE CROP]	Outputs an equal top and bottom width.
[LETTER BOX]	Outputs an equal right and left width.
[SQUEEZE]	Outputs by compressing in the horizontal direction to fit the screen.

(Factory setting: [LETTER BOX])

[LCD]

[BRIGHTNESS]

Adjusts the brightness of the LCD monitor.
The items that can be set are as follows.
- [–15]…[15]

(Factory setting: [0])

[COLOR LEVEL]

Adjusts the color level of the LCD monitor.
The items that can be set are as follows.
- [–15]…[15]

(Factory setting: [0])

[CONTRAST]

Adjusts the contrast of the LCD monitor.
The items that can be set are as follows.
- [–30]…[30]

(Factory setting: [0])

[BACK LIGHT]

Adjusts the brightness of the LCD monitor backlight. [0] is the standard brightness.
The items that can be set are as follows.
- [–1], [0], [1], [2]

(Factory setting: [0])

[SELF SHOOT]

Sets the display of the LCD monitor when mirror shooting is performed.

[NORMAL]	Does not invert the left and right sides.
[MIRROR]	Inverts the left and right sides.

(Factory setting: [MIRROR])

[VF]

[BRIGHTNESS]

Adjusts the brightness of the viewfinder.
The items that can be set are as follows.
- [–15]…[15]

(Factory setting: [0])

[COLOR LEVEL]

Adjusts the color level of the viewfinder.

The items that can be set are as follows.

- [–15]…[15]

(Factory setting: [0])

[CONTRAST]

Adjusts the contrast of the viewfinder.

The items that can be set are as follows.

- [–30]…[30]

(Factory setting: [0])

[VF COLOR]

Sets whether to display video in the viewfinder in color or black and white.

[ON]	Displays in color.
[OFF]	Displays in black and white.

(Factory setting: [ON])

[EYE SENSOR]

Sets sensitivity of the eye sensor.

The items that can be set are as follows.

- [HIGH], [LOW]

(Factory setting: [HIGH])

[LCD/VF HDR]

Sets the output image from the LCD monitor and viewfinder.

[SDR]	Outputs in the standard dynamic range.
[HDR]	Outputs in the high dynamic range.

(Factory setting: [HDR])

NOTE

- The setting is fixed to [SDR] when set to following menu.
  - [SYSTEM] menu → [REC FORMAT] → [480-59.94i/AVCHD SA]
  - [SYSTEM] menu → [REC FORMAT] → [576-50.00i/AVCHD SA]
- When the [SCENE FILE] menu → [GAMMA MODE SEL] is set to anything other than [HLG], the camera image is output in the standard dynamic range.
- This cannot be set when the [SYSTEM] menu → [COLOR SETTING] is set to [V-Log].

[LCD/VF V-Log]

Sets the output image from the LCD monitor and viewfinder when the [SYSTEM] menu → [COLOR SETTING] is set to [V-Log].

[V-Log]	Outputs in same color as the recording image.
[V-709]	Outputs in a converted color equivalent to standard CINE-LIKE. Setting suitable for a preview.

(Factory setting: [V-Log])

NOTE

- The setting is fixed to [V-709] when set to the following menu.
  - [SYSTEM] menu → [REC FORMAT] → [480-59.94i/AVCHD SA]
  - [SYSTEM] menu → [REC FORMAT] → [576-50.00i/AVCHD SA]
- This cannot be set when the [SYSTEM] menu → [COLOR SETTING] is set to [NORMAL].

[INDICATOR]

Selects the indicator to display in the output image.

[FULL AUTO]

Displays/hides the status when the <AUTO/MANUAL> switch is at <AUTO>.

The items that can be set are as follows.

- [ON], [OFF]

(Factory setting: [ON])

[SLOT1/2 STATUS]

Displays/hides the status of the card slot and remaining recording capacity.

The items that can be set are as follows.

- [ON], [OFF]

(Factory setting: [ON])

[2 SLOTS FUNC.]

Displays/hides the setting in the [RECORDING] menu → [2 SLOTS FUNC.].

The items that can be set are as follows.
- [ON], [OFF]

(Factory setting: [ON])

[STREAMING]

Displays/hides the streaming status.
The items that can be set are as follows.
- [ON], [OFF]

(Factory setting: [ON])

[NETWORK]

Displays/hides the connection status of the wired LAN, wireless LAN, and USB tethering.
The items that can be set are as follows.
- [ON], [OFF]

(Factory setting: [ON])

[BATTERY REMAIN]

Displays/hides the power status.
The items that can be set are as follows.
- [ON], [OFF]

(Factory setting: [ON])

[REC FORMAT]

Displays/hides the recording format settings.
The items that can be set are as follows.
- [ON], [OFF]

(Factory setting: [ON])

[FRAME RATE]

Displays/hides the settings in the [SCENE FILE] menu → [FRAME RATE].
The items that can be set are as follows.
- [ON], [OFF]

(Factory setting: [ON])

[CLIP NAME]

Displays/hides the clip file name to be recorded. Up to eight characters from the beginning of the file name are displayed.
The items that can be set are as follows.
- [ON], [OFF]

(Factory setting: [ON])

[BONDING DEVICE]

Displays/hides the status of the device acquired from the bonding device.
This is not displayed when the device status cannot be acquired from the bonding device even if [ON] is selected.
The items that can be set are as follows.
- [ON], [OFF]

(Factory setting: [ON])

[REC REMOTE]

Displays/hides the control status of the recording start and recording stop on the external equipment connected to the <SDI OUT> terminal and the <HDMI> terminal.
The items that can be set are as follows.
- [ON], [OFF]

(Factory setting: [ON])

[REC MODE]

Displays/hides the status of the interval recording.
The items that can be set are as follows.
- [ON], [OFF]

(Factory setting: [ON])

[FBC]

Toggles whether to display when the flash band compensation function is activated.
The items that can be set are as follows.
- [ON], [OFF]

(Factory setting: [ON])

[HDR/DRS/V-Log]

Toggles whether to display when the high dynamic range recording function, dynamic range stretcher function, or V-Log recording function is enabled.
The items that can be set are as follows.
- [ON], [OFF]

(Factory setting: [ON])

[O.I.S.]

Toggles whether to display when the optical image stabilizer function is enabled.
The items that can be set are as follows.
- [ON], [OFF]

(Factory setting: [ON])

[SCENE FILE]

Displays/hides scene file name.
The items that can be set are as follows.
- [ON], [OFF]

(Factory setting: [ON])

NOTE

- The setting is fixed to [OFF] when the [SYSTEM] menu → [COLOR SETTING] is set to [V-Log].

[AREA/FACE]

Toggles whether to display when the area mode function, the auto focus area width adjustment function, or the face detection/tracking AE&AF function is enabled.
The items that can be set are as follows.
- [ON], [OFF]

(Factory setting: [ON])

[AUDIO LEVEL METER]

Displays/hides the audio level meter.
The items that can be set are as follows.
- [ON], [OFF]

(Factory setting: [ON])

[GAIN]

Displays/hides the gain value.
The items that can be set are as follows.
- [ON], [OFF]

(Factory setting: [ON])

[ND FILTER]

Displays/hides the ND filter transmittance.
The items that can be set are as follows.
- [ON], [OFF]

(Factory setting: [ON])

[SHUTTER]

Displays/hides the shutter speed.
The items that can be set are as follows.
- [ON], [OFF]

(Factory setting: [ON])

[IRIS]

Displays/hides F value and auto iris control status.
The items that can be set are as follows.
- [ON], [OFF]

(Factory setting: [ON])

[ZOOM/FOCUS]

Switches the unit of zoom and focus values.

[NUMBER]	Displays a position value for the zoom from [000] to [999] and focus from [00] to [99].
[mm/feet]	Displays the zoom in units of millimeters and the focus in units of feet.
[mm/m]	Displays the zoom in units of millimeters and the focus in units of meters.
[OFF]	Does not display either the zoom or focus.

(Factory setting: [NUMBER])

[WHITE BALANCE]

Displays/hides the color temperature.
The items that can be set are as follows.
- [ON], [OFF]

(Factory setting: [ON])

[FACE DETECTION]

Sets the display content of the face detection frame.

[ALL]	Displays all the face frames.
[MAIN FACE]	Displays only the priority face frame.
[OFF]	Does not display all frames.

(Factory setting: [ALL])

[DATE/TIME]

Displays/hides the date and time.
The display for the year, month, and day follows the [DATE FORMAT] setting.
The date and time are not displayed when the time stamp function is enabled.

[OFF]	Does not display the date and time.
[DATE]	Displays only the date.
[TIME]	Displays only the time.
[DATE&TIME]	Displays the date and time.

(Factory setting: [OFF])

[SHOOTING MODE]

Displays/hides high-sensitivity mode.
The items that can be set are as follows.
- [ON], [OFF]

(Factory setting: [ON])

[MULTI MANUAL]

Displays/hides the multi manual function.
The items that can be set are as follows.
- [ON], [OFF]

(Factory setting: [ON])

[D.ZOOM]

Displays/hides the digital zoom ratio.
The items that can be set are as follows.
- [ON], [OFF]

(Factory setting: [ON])

[IR REC]

Displays/hides the settings in the [CAMERA] menu → [SW MODE] → [IR REC].
The items that can be set are as follows.
- [ON], [OFF]

(Factory setting: [ON])

[PLAYBACK STATUS]

Displays/hides the playback status.
The items that can be set are as follows.
- [ON], [OFF]

(Factory setting: [ON])

[SD CARD WARNING]

Toggles whether to display the warning when an SD card is inserted while [FILE FORMAT] is set to [P2].
The items that can be set are as follows.
- [ON], [OFF]

(Factory setting: [ON])

[MARKER]

[CENTER MARKER]

Switch the type of the center marker.

[1]	+ (large)
[2]	Open center (large)
[3]	+ (small)
[4]	Open center (small)
[OFF]	Does not display.

(Factory setting: [1])

[SAFETY MARKER]

Selects the type of frame for the safety zone marker.

[1]	Box
[2]	Corners
[OFF]	Does not display.

(Factory setting: [2])

[SAFETY AREA]

Sets the size of the safety zone marker.
The items that can be set are as follows.
- [80%]…[100%]

(Factory setting: [90%])

[FRAME MARKER]

Sets the aspect ratio of the frame marker. The frame marker is not displayed when [OFF] is selected.
The items that can be set are as follows.
- [4:3], [13:9], [14:9], [1.85:1], [2.35:1], [OFF]

(Factory setting: [OFF])

[FRAME COLOR]

Sets the color of the frame marker.
The items that can be set are as follows.
- [WHITE], [BLACK], [RED], [GREEN], [BLUE], [YELLOW]

(Factory setting: [WHITE])

[FOCUS ASSIST]

[FOCUS ASSIST SW]

Sets the focus assist method of the <FOCUS ASSIST> button.

[EXPAND]	Sets the enlarged display.
[PEAKING]	Sets the peaking display.

(Factory setting: [EXPAND])

[EXPAND MODE]

Sets the enlargement display function mode.

[10SEC]	Disables the enlarged display function after ten seconds have elapsed.
[HOLD]	Enables the enlarged display function until the <FOCUS ASSIST> button assigned to [EXPAND] or the USER button is pressed or the USER button icon is touched again.
[UNTIL REC]	Enables the enlarged display function until performing recording operation.

(Factory setting: [10SEC])

[EXPAND VALUE]

Adjusts the enlargement factor of the enlarged display function.
The items that can be set are as follows.
- [×2], [×3], [×4]

(Factory setting: [×2])

[PEAKING LEVEL]

Sets the intensity of the peaking display.
The items that can be set are as follows.
- [LOW], [MID], [HIGH]

(Factory setting: [MID])

[PEAKING COLOR]

Sets the color of the peaking display.
The items that can be set are as follows.
- [RED], [GREEN], [WHITE]

(Factory setting: [RED])

[BLACK & WHITE]

Enables/disables the monochrome display.

[ON]	Enables the monochrome display.
[OFF]	Disables the monochrome display.
[DURING PEAKING]	Enables the monochrome display while the peaking display is enabled.

(Factory setting: [OFF])

[DETAIL]

Sets the intensity of the contour for the video to make it easier to focus.

The items that can be set are as follows.
- [ON], [OFF]

(Factory setting: [ON])

[DETAIL LEVEL]

Sets the intensity of the contours.
The items that can be set are as follows.
- [–3]…[3]

(Factory setting: [0])

[DETAIL FREQ.]

Adjusts the frequency of the contour highlights.
The items that can be set are as follows.
- [HIGH], [LOW]

(Factory setting: [LOW])

[EI ASSIST]

[ZEBRA]

Sets whether to superimpose the zebra signal to the output.

[MOMENT]	Press the USER button to which [ZEBRA] is assigned or touch the USER button icon to superimpose the zebra signal for approximately five seconds.
[ON]	Always superimposes the zebra signal. Press the USER button to which [ZEBRA] is assigned in the [ON] settings or touch the USER button icon to set to [OFF].
[OFF]	Does not superimpose the zebra signal. Press the USER button to which [ZEBRA] is assigned in the [OFF] settings or touch the USER button icon to set to [ON].

(Factory setting: [OFF])

NOTE

- The setting is fixed to [OFF] when the [SYSTEM] menu → [COLOR SETTING] is set to [V-Log].

[ZEBRA1 DETECT]

Sets the detection level of zebra pattern 1.
The items that can be set are as follows.
- [0%]…[109%]

(Factory setting: [80%])

NOTE

- This cannot be set when the [SYSTEM] menu → [COLOR SETTING] is set to [V-Log].

[ZEBRA2 DETECT]

Sets the detection level of zebra pattern 2.
The items that can be set are as follows.
- [0%]…[109%]

(Factory setting: [100%])

NOTE

- This cannot be set when the [SYSTEM] menu → [COLOR SETTING] is set to [V-Log].

[ZEBRA2]

Enables/disables zebra pattern 2 and selects [SPOT].
The items that can be set are as follows.
- [ON], [SPOT], [OFF]

(Factory setting: [OFF])

NOTE

- This cannot be set when the [SYSTEM] menu → [COLOR SETTING] is set to [V-Log].

[WFM MODE]

Sets the display of the waveform monitor. Displaying of the waveform and the vector can be switched.

[WAVE]	Displays the waveform.
[VECTOR]	Displays the vector.
[WAVE/VECTOR]	Displays the waveform and the vector. The waveform, vector or no display toggles in order each time the USER button to which [WFM] is assigned is pressed or the USER button icon is touched.

(Factory setting: [WAVE])

[WFM TRANSPARENCE]

Sets the transmittance of the waveform monitor.

The items that can be set are as follows.
- [0%], [25%], [50%]

(Factory setting: [25%])

[Y GET UNIT]

Sets the unit of the brightness of Y GET.
The items that can be set are as follows.
- [%], [STOP]

(Factory setting: [%])

NOTE

- The setting is fixed to [%] when the [CAMERA] menu → [SW MODE] → [GAIN/ISO MODE] is set to [dB].

[LEVEL GAUGE]

[LEVEL GAUGE]

Displays/hides the level gauge.
The items that can be set are as follows.
- [ON], [OFF]

(Factory setting: [ON])

[LEVEL GAUGE RESET]

Sets the horizontal and vertical reference value set by [LEVEL GAUGE SET] in the USER button to the factory setting.
The items that can be selected are as follows.
- [YES], [NO]

[RECORDING] menu

Sets the various items in the recording function.

[FORMAT MEDIA]

Formats the memory card in the specified card slot. Data deleted as a result of formatting cannot be restored. Always confirm the data before formatting.
The items that can be selected are as follows.
- [SLOT1], [SLOT2]

[CLIP NAME]

[CAM INDEX]

Sets the CAM INDEX used in the name for the MOV format file to be recorded. Set one upper case alphabetical character. This is used as a value to be stored in the volume label of the memory card.
The items that can be set are as follows.
- [A]…[Z]

(Factory setting: [A])

[NEXT CARD COUNT]

Sets the CARD COUNT used in the name for the MOV format file to be recorded. In the following cases, the setting value in [NEXT CARD COUNT] is stored in the volume label of the memory card together with the [CAM INDEX] setting value as CARD COUNT. Also, the setting value will increase one after storing. ([001] returns after [999])
- When formatted the memory card
- When recorded to the memory card where CARD COUNT is not stored in the volume label

The items that can be set are as follows.
- [001]…[999]

(Factory setting: [001])

[FILE SPLIT]

Selects the split method of the file in P2 format to be recorded.

[ONE FILE]	Records as one file on the memory card exceeding 32 GB when the recording format is AVC-Intra 422/AVC-LongG50/AVC-LongG25/AVC-LongG12.
[SPLIT]	The file is split in 4 GB units regardless of the recording format or the memory card.
[SHORT SPLIT]	The file is split in approximately 128 seconds units regardless of the recording format or the memory card. Furthermore, the continuous recording time for each recording is approximately 3.5 hours.

(Factory setting: [SPLIT])

NOTE

- When using a microP2 card with 32 GB or less, it is split every 4 GB regardless of selected item.
- A clip of 4 GB or more recorded by selecting [ONE FILE] cannot be copied to a microP2 card with 32 GB or less.
- [ONE FILE] cannot be selected when the recording format is AVC-Intra 200/AVC-Intra 100/AVC-Intra 50.
- [SHORT SPLIT] cannot be selected during the interval recording.

[2 SLOTS FUNC.]

Sets the recording function that uses two memory cards.

[OFF]	Does not set.
[RELAY REC]	Sets to the relay recording.
[SIMUL REC]	Sets to the simultaneous recording.
[BACKGR REC]	Sets to the background recording.

(Factory setting: [RELAY REC])

NOTE

- For the combinations and restrictions of the settings, refer to “Recording function that cannot be used simultaneously” (page 221).

[PRE REC]

Sets whether to perform pre-recording.
The pre-recording time varies depending on the setting of the [SYSTEM] menu → [REC FORMAT].

[ON]	Performs the pre-recording. The pre-recording time is as follows. ● When [FILE FORMAT] is set to [P2]: Approximately 3 seconds ● When [FILE FORMAT] is set to [MOV], and [REC FORMAT] is set to [2160-29.97p/422ALL-I 400M], [2160-25.00p/422ALL-I 400M], or [2160-23.98p/422ALL-I 400M]: Approximately 3 seconds ● When [FILE FORMAT] is set to [MOV], and [REC FORMAT] is set to [2160-59.94p/HEVC LongGOP 200M], [2160-59.94p/HEVC LongGOP 100M], [2160-59.94p/420LongGOP 150M], [2160-50.00p/HEVC LongGOP 200M], [2160-50.00p/HEVC LongGOP 100M], [2160-50.00p/420LongGOP 150M], [2160-29.97p/HEVC LongGOP 150M], [2160-29.97p/422LongGOP 150M], [2160-29.97p/420LongGOP 100M], [2160-25.00p/HEVC LongGOP 150M], [2160-25.00p/422LongGOP 150M], [2160-25.00p/420LongGOP100M], [2160-23.98p/HEVC LongGOP 150M], [2160-23.98p/422LongGOP 150M], or [2160-23.98p/420LongGOP 100M]: Approximately 5 seconds ● When set to other than above: Approximately 10 seconds
[OFF]	Does not perform the pre-recording.

(Factory setting: [OFF])

NOTE

- For the combinations and restrictions of the settings, refer to “Recording function that cannot be used simultaneously” (page 221).

[PROXY SETTING]

Sets the recording function of the proxy data.

[PROXY REC]

Selects whether to perform the recording of the proxy data.

[ON]	Records the proxy data.
[OFF]	Does not record the proxy data.

(Factory setting: [OFF])

NOTE

- For the combinations and restrictions of the setting, refer to “Recording function that cannot be used simultaneously” (page 221).

[PROXY V-Log]

Sets the image to be recorded as a proxy data when the [SYSTEM] menu → [COLOR SETTING] is set to [V-Log].

[V-Log]	Records with the same color as the recording image of the main material.
[V-709]	Records by converting to the color equivalent to standard CINE-LIKE.

(Factory setting: [V-Log])

NOTE

- This cannot be set when the [SYSTEM] menu → [COLOR SETTING] is set to [NORMAL], or the [RECORDING] menu → [PROXY SETTING] → [PROXY REC] → [OFF] is set.

[PROXY HDR]

Sets the image to be recorded as the proxy data.

[SDR]	Records in the standard dynamic range.
[HDR]	Records in the high dynamic range.

(Factory setting: [HDR])

NOTE

- This cannot be set when the [SCENE FILE] menu → [GAMMA MODE SEL] is set to anything other than [HLG], or the [RECORDING] menu → [PROXY SETTING] → [PROXY REC] → [OFF] is set. Records in the image of standard dynamic range.

[REC FUNCTION]

[REC MODE]

Selects the recording mode.

[NORMAL]	Performs the standard recording.
[INTERVAL]	Performs the interval recording. (A function to repeatedly perform the operation of one frame recording in set time interval.)

(Factory setting: [NORMAL])

NOTE

- For the combinations and restrictions of the settings, refer to “Recording function that cannot be used simultaneously” (page 221).

[REC MODE HOLD]

Selects whether to hold [REC MODE] settings.

[ON]	Holds the settings.
[OFF]	Does not hold the settings. It will always be [NORMAL] the next time when the power is turned on.

(Factory setting: [OFF])

[INTERVAL TIME]

Sets the interval duration for interval recording.

The items that can be set are as follows.

- [1s], [2s], [5s], [10s], [30s], [1min], [5min], [10min]

(Factory setting: [5min])

[TC/UB]

[TC PRESET]

Sets the default value of the time code to record.

Hour	[00]…[23]
Minute	[00]…[59]
Second	[00]…[59]
Frame	[00] … [23] (when [23.98p]) [00] … [24] (when [50.00i], [50.00p], or [25.00p] is set) [00] … [29] (when [59.94i], [59.94p], or [29.97p] is set)

(Factory setting: [00]) (each item)

[UB PRESET]

Sets user bits.

Enabled only when [USER] is selected in [UB MODE] of [TC/UB].

Each digit can be set in following range.

- [00]…[FF]

(Factory setting: [00])

[FREE/REC RUN]

Sets the operation mode to advance the time code generator.

[FREE RUN]	Advances regardless of the operation mode.
[REC RUN]	Advances only while recording.

(Factory setting: [REC RUN])

NOTE

- The setting is fixed to [REC RUN] when the [SCENE FILE] menu → [VFR] → [ON] is set.
- The setting is fixed to [REC RUN] when the [SYSTEM] menu → [SUPER SLOW] → [ON] is set.
- The setting is fixed to [FREE RUN] when the [RECORDING] menu → [PRE REC] → [ON] is set.
- The setting is fixed to [FREE RUN] when the [RECORDING] menu → [2 SLOTS FUNC.] → [BACKGR REC] is set.
- The setting is fixed to [REC RUN] when the [RECORDING] menu → [REC FUNCTION] → [REC MODE] → [INTERVAL] is set.

[DF/NDF]

Sets the count method for the time code generator.

Enabled only when the recording frame frequency of the [SYSTEM] menu → [REC FORMAT] is set to 59.94i/59.94p/29.97p.

[DF]	Uses the drop frame mode.
[NDF]	Uses the non-drop frame mode.

(Factory setting: [DF])

NOTE

- The setting is fixed to [NDF] when the [RECORDING] menu → [REC FUNCTION] → [REC MODE] → [INTERVAL] is set.

[UB MODE]

Selects the user bits mode. User bits information is recorded in the clip. Also, it is output as LTC UB, VITC UB of the SDI signal.

[FRAME RATE]	Selects the image information (such as frame rate) of the camera.
[USER]	Selects the user bits set in [UB PRESET].
[TIME]	Selects the local time. (hh, mm, ss)
[DATE]	Selects the local date and time. (YY, MM, DD, hh)
[TC]	Records the time code value as user bits.
[CLIP NAME]	Records the value that CAM INDEX (one character) and CARD COUNT (three-digit number) both converted to ASCII character code. Only enabled when the [SYSTEM] menu → [FILE FORMAT] → [MOV] is set.

(Factory setting: [USER])

[TC IN/OUT SEL]

Sets the input/output of the <TC IN/OUT> terminal.

[TC IN]	Sets to the time code input.
[TC OUT]	Sets to the time code output.

(Factory setting: [TC IN])

[TC OUT REF]

Sets the output delay of the time code that is output from the <TC IN/OUT> terminal.

[RECORDING]	Outputs the recording time code without delay. This is used when performing simultaneous recording on two cameras with the time code of this camera as the master.
[SDI OUT]	Matches to output image from the <SDI OUT> terminal. Outputs without delay when video is not output from the <SDI OUT> terminal.

(Factory setting: [RECORDING])

[REC COUNTER]

Sets operation of the counter for recording.

[TOTAL]	Performs continuous counting until reset using the <RESET> button.
[CLIP]	Clears the counter value at the start of recording and counts the time for each recording.

(Factory setting: [TOTAL])

[TIME STAMP]

Selects whether to superimpose the date and time on videos that are shot. The display for the year, month, and day follows the [DATE FORMAT] setting.

[OFF]	Does not superimpose the date and time.
[DATE]	Superimposes only the date.
[TIME]	Superimposes only the time.
[DATE&TIME]	Superimposes the date and time.

(Factory setting: [OFF])

NOTE

- The setting is fixed to [OFF] when the [SYSTEM] menu → [COLOR SETTING] is set to [V-Log].

[REC META DATA]

[LOAD]

Selects the metadata upload file saved on the memory card and loads into the camera.

[RECORD]

Sets whether to add the loaded metadata during recording.

[ON]	Will add.
[OFF]	Will not add.

(Factory setting: [OFF])

[USER CLIP NAME]

Sets the data to be recorded in the [USER CLIP NAME].

[TYPE1]	Records the loaded data setting value (when [RECORD] is set to [ON]). Records the same value as [GLOBAL CLIP ID] (when [RECORD] is set to [OFF]).
[TYPE2]	Records the loaded data and the counter value (when [RECORD] is set to [ON]). Records the same value as [CLIP NAME] (when [RECORD] is set to [OFF]).

(Factory setting: [TYPE1])

[CARD SERIAL]

Sets if the text memo containing the serial number or the type of the card is added as a metadata.

[ON]	Will add.
[OFF]	Will not add.

(Factory setting: [OFF])

[INITIALIZE]

Deletes and initializes all the loaded metadata.

[PROPERTY]

Confirms or modifies the loaded metadata.

[NETWORK] menu

Sets the setting regarding the network function.

[DEVICE SEL]

Select the device that connects external equipment (computer, etc.) to the camera.
The camera may restart when the setting is changed.

[LAN]	Connects via a wired LAN.
[WLAN]	Connects via a wireless LAN.
[USB TETHERING]	Connects to iPhone/iPad or Android devices using USB tethering.
[OFF]	Does not connect.

(Factory setting: [OFF])

[NETWORK FUNC]

Selects the network function of the camera.

[STREAMING]	Enables the streaming function.
[STREAMING(4K)]	Enables the 4K streaming function.
[NDI|HX]	Enables the NDI|HX function.
[OFF]	Does not use the network function.

(Factory setting: [OFF])

NOTE

- Recording and thumbnail display are not possible when [STREAMING(4K)] or [NDI|HX] is selected.

[IP REMOTE]

Perform settings for the IP remote. (Remote operation by the remote camera controller or CX ROP app)

[ENABLE/DISABLE]

Sets whether to enable the IP remote function.

[ENABLE]	Enables the IP remote function.
[ENABLE(HOLD)]	Enables the IP remote function. Connection will be preserved even if the remote controller switches cameras.
[DISABLE]	Disables the IP remote function.

(Factory setting: [DISABLE])

NOTE

- Set to [ENABLE(HOLD)] when using the protocol for a remote camera.
- Port 80 is used for the protocol for a remote camera.
- The whole menu will close immediately after setting this to [DISABLE] while connected to a remote controller.

[CX ROP PORT]

Specifies the standby port number to connect to CX ROP.
(Factory setting: [49152])

[REMOTE CONTROL PORT]

Specifies the standby port number to connect to a remote controller.
(Factory setting: [49154])

[USER ACCOUNT]

Registers a new user account to use for authentication in the network function of the camera. (Maximum of ten accounts)
The character limit of the user account name and password is as follows.

- User account name: Maximum of 31 characters
- Password: Between 8 to 15 characters

[ACCOUNT LIST]

Displays a list of registered users.

In addition, select the user and press the <SET> button to display the confirmation screen to delete a registered user.

[UPLOAD]

Sets the upload function that will transfer the clip recorded on the camera to a server device on the network by linking with a cloud service.

[ENABLE/DISABLE]

Enables/disables the upload function from the camera to the server device.

[ENABLE]	Enables the upload function.
[DISABLE]	Disables the upload function.

(Factory setting: [DISABLE])

[CONNECTION INFO.]

Select where the connection information for upload is to be acquired from.

[MEMORY]	Uses the information saved in the camera memory. It is necessary to load the connection information from the file in the SD card with [LOAD (SD CARD)] in [UPLOAD] and save in the camera memory in advance.
[SD CARD]	Uses the information from the file in the SD card.

(Factory setting: [MEMORY])

[DATA TYPE]

Displays the type of the connection information data. (Cannot be changed)

[--]	There is no connection information.
[CLOUD]	This is a connection information for the cloud service to upload.

(Factory setting: [--])

[LOAD (SD CARD)]

The connection information file is loaded from the SD card and saved in the camera memory when [CONNECTION INFO.] is set to [MEMORY].

[CLEAR (MEMORY)]

Clears the connection information for upload saved in the camera memory.

[STREAMING]

Performs the settings for the streaming function.

[STREAMING PROTOCOL]

Specifies the streaming protocol.

[RTMP(S)]	Streams in RTMP or RTMPS.
[RTSP]	Streams in RTSP.
[SRT CLIENT]	Streams in client mode of SRT.
[SRT LISTENER]	Streams in listener mode of SRT.

(Factory setting: [RTSP])

[STREAMING FORMAT]

Specifies the streaming format.

The item that can be selected varies depending on the condition. For details, refer to “Settings when using the streaming function” (page 204) or “Settings when using the 4K streaming function” (page 204).

[CONNECTION INFO.]

Selects the internal memory of the camera or the memory card as the reference location for the transfer destination when starting a stream with the operation of the camera.

The items that can be set are as follows.

- [MEMORY], [SD CARD]

(Factory setting: [MEMORY])

[DATA TYPE]

Displays the type of the setting data. (Cannot be changed)

[GENERAL]	General streaming settings
[CLOUD]	Cloud service setting

[RTMP(S) RECEIVER URL]

Enter the destination URL in following format.

- rtmp://(server URL):(port number)/(path)/(stream key)
- rtmps://(server URL):(port number)/(path)/(stream key)

[RTSP SETTING]

[PORT]	Sets the port number to wait for the RTSP command. • Factory setting: [554]
[MULTICAST]	Enables/disables the multicast function. • Factory setting: [DISABLE]
[MULTICAST ADDRESS]	Sets the address when using the streaming with the multicast. • Factory setting: [239.192.0.20]
[MULTICAST PORT]	Sets the port number when using the streaming with the multicast. • Factory setting: [37004]
[TTL/HOP LIMIT]	Sets the TTL/HOP limit value for the multicast. (1-254) • Factory setting: [16]

[SRT SETTING]

[DEST URL]	Specifies the destination URL for the client mode.
[STREAM ID]	Sets the stream ID for the client mode.
[PORT]	Specifies the standby port for the listener mode. • Factory setting: [2020]
[TTL/HOP LIMIT]	Sets the TTL/HOP limit value. (1-255) • Factory setting: [254]
[LATENCY]	Sets the time (ms) from when the packet is sent and to be played back at the receiving side. • Factory setting: [120]
[ENCRYPTION]	Sets the encryption of the IP image to be streamed. [OFF]: IP image is streamed without encryption. [AES128]: It is encrypted with AES 128 bit. [AES192]: It is encrypted with AES 192 bit. [AES256]: It is encrypted with AES 256 bit. • Factory setting: [OFF] ***NOTE*** • [--] is displayed when [DATA TYPE] is set to [CLOUD].
[PASSPHRASE]	Sets the phrase to decrypt the encrypted IP image.

[LOAD (SD CARD)]

Loads the settings file from the memory card and reflects in the menu when [CONNECTION INFO.] is set to [MEMORY].

The items that can be selected are as follows.

• [YES], [NO]

[SAVE (SD CARD)]

Encrypts and saves the information of the destination URL to the memory card.

The items that can be selected are as follows.

• [YES], [NO]

[CLEAR (MEMORY)]

Clears the contents of the streaming setting set in the menu item.

The setting information of the streaming destination that was received from the cloud service is also cleared.

The items that can be selected are as follows.

• [YES], [NO]

[START]

Starts streaming.

The items that can be set are as follows.

• [ON], [OFF]

(Factory setting: [OFF])

[NDI|HX]

Performs settings related to NDI|HX.

[ACTIVATION]

Displays whether the NDI|HX function is available. (Cannot be changed)

[NDI|HX]	The NDI|HX function is available.

[STREAMING FORMAT]

Specifies the streaming format.

The items that can be set are as follows.

• When [FILE FORMAT] is set to [P2] or [MOV], and [REC FORMAT] is set to 1080/50p

- [1920×1080-50fps 24M], [1920×1080-50fps 16M], [1920×1080-50fps 10M], [1920×1080-50fps 8M], [1280×720-50fps 14M], [1280×720-50fps 10M], [1280×720-50fps 6M]
  (Factory setting: [1920×1080-50fps 10M])

- When [FILE FORMAT] is set to [P2] or [MOV], and [REC FORMAT] is set to 1080/59.94p
  - [1920×1080-60fps 24M], [1920×1080-60fps 16M], [1920×1080-60fps 10M], [1920×1080-60fps 8M], [1280×720-60fps 14M], [1280×720-60fps 10M], [1280×720-60fps 6M]
    (Factory setting: [1920×1080-60fps 10M])
- When [FILE FORMAT] is set to [P2] or [MOV], and [REC FORMAT] is set to 1080/50i or 1080/25p
  - [1920×1080-25fps 14M], [1920×1080-25fps 10M], [1920×1080-25fps 6M], [1280×720-25fps 8M], [1280×720-25fps 4M], [1280×720-25fps 2M]
    (Factory setting: [1920×1080-25fps 10M])
- When [FILE FORMAT] is set to [P2] or [MOV], and [REC FORMAT] is set to 1080/59.94i or 1080/29.97p
  - [1920×1080-30fps 14M], [1920×1080-30fps 10M], [1920×1080-30fps 6M], [1280×720-30fps 8M], [1280×720-30fps 4M], [1280×720-30fps 2M]
    (Factory setting: [1920×1080-30fps 10M])
- When [FILE FORMAT] is set to [P2], and [REC FORMAT] is set to 720/50p
  - [1280×720-50fps 14M], [1280×720-50fps 10M], [1280×720-50fps 6M]
    (Factory setting: [1280×720-50fps 10M])
- When [FILE FORMAT] is set to [P2], and [REC FORMAT] is set to 720/59.94p
  - [1280×720-60fps 14M], [1280×720-60fps 10M], [1280×720-60fps 6M]
    (Factory setting: [1280×720-60fps 10M])

NOTE

- Cannot be set when [FILE FORMAT] is set to [AVCHD] or [REC FORMAT] is set to UHD or 1080/23.98p.

[MULTICAST]

Enables/disables the multicast function.
(Factory setting: [DISABLE])

[MULTICAST ADDRESS]

Sets the address when using the streaming with the multicast.
(Factory setting: [239.192.0.20])

[MULTICAST PORT]

Sets the port number when using the streaming with the multicast.
(Factory setting: [37004])

[TTL/HOP LIMIT]

Sets the TTL/HOP limit value for the multicast. (1-254)
(Factory setting: [16])

[CLEAR ACTIVATION]

This function cannot be used.

[LAN PROPERTY]

Performs settings related to the wired LAN.

[MAC ADDRESS]

Displays the MAC address for the wired LAN of the camera. (Cannot be changed)

[IPv4 SETTING]

[DHCP]	Sets whether to use the automatic acquisition through DHCP or to use the DHCP server function of the camera. [OFF]: Does not use DHCP. [CLIENT]: Acquires automatically with DHCP. The address from 192.168.0.10 through 192.168.0.255 is automatically assigned when the IP address cannot be acquired automatically within one minute. [SERVER]: Enables the DHCP server function of the camera. ● Factory setting: [OFF]
[IP ADDRESS]	Sets the IP address. ● Factory setting: [192.168.0.1] ***NOTE*** ・Cannot be set when [LAN PROPERTY] → [IPv4 SETTING] → [DHCP] → [CLIENT] is selected.
[SUBNET MASK]	Sets the subnet mask. ● Factory setting: [255.255.255.0] ***NOTE*** ・Cannot be set when [LAN PROPERTY] → [IPv4 SETTING] → [DHCP] → [CLIENT] is selected.
[DEFAULT GATEWAY]	Sets the default gateway. ● Factory setting: [192.168.0.254] ***NOTE*** ・Cannot be set when [LAN PROPERTY] → [IPv4 SETTING] → [DHCP] → [CLIENT] is selected.
[PRIMARY DNS]	Sets the primary DNS server. ● Factory setting: [0.0.0.0]

[SECONDARY DNS]	Sets the secondary DNS server. • Factory setting: [0.0.0.0]

[IPv6 SETTING]

[ENABLE/DISABLE]	Sets whether to use IPv6. [ENABLE]: Uses IPv6. [DISABLE]: Does not use IPv6. • Factory setting: [DISABLE]
[DHCP]	Sets whether to use automatic acquisition via DHCP. [OFF]: Does not use DHCP. [CLIENT]: Performs automatic acquisition through DHCP. • Factory setting: [OFF]
[IP ADDRESS]	Sets the IP address. • Factory setting: [::]
[PREFIX LENGTH]	Sets the prefix length of the subnet. • Factory setting: [64]
[DEFAULT GATEWAY]	Sets the default gateway. • Factory setting: [::]
[PRIMARY DNS]	Sets the primary DNS server. • Factory setting: [::]
[SECONDARY DNS]	Sets the secondary DNS server. • Factory setting: [::]

[WLAN PROPERTY]

Performs settings related to the wireless LAN.

[MAC ADDRESS]

Displays the wireless LAN MAC address of the camera. (Cannot be changed)

[TYPE]

Sets the connection method to the wireless LAN.

[DIRECT]	It can connect directly without using a wireless access point to a device equipped with wireless LAN such as a tablet terminal.
[INFRA(SELECT)]	Connects to the wireless access point. The access point is selected from the list.
[INFRA(MANUAL)]	Connects to the wireless access point. Wireless access point is entered manually.

(Factory setting: [DIRECT])

[SSID]

Enters or displays the network name of the camera (SSID). (32 characters or less)

(Factory setting: [AG-CX350E])

[BAND]

Switches between two communication methods ([2.4GHz] or [5GHz]) when the [NETWORK] menu → [WLAN PROPERTY] → [TYPE] → [DIRECT] is selected.

The items that can be set are as follows.

- [2.4GHz], [5GHz]

(Factory setting: [2.4GHz])

[CHANNEL(2.4GHz)]

Sets the channel to be used when connected to the wireless LAN with following items set.

- The [NETWORK] menu → [WLAN PROPERTY] → [TYPE] → [DIRECT]
- The [NETWORK] menu → [WLAN PROPERTY] → [BAND] → [2.4GHz]

The items that can be set are as follows.

- [AUTO], [CH1], [CH6], [CH11]

(Factory setting: [AUTO])

[CHANNEL(5GHz)]

Sets the channel to be used when connected to the wireless LAN with following items set.

- The [NETWORK] menu → [WLAN PROPERTY] → [TYPE] → [DIRECT]
- The [NETWORK] menu → [WLAN PROPERTY] → [BAND] → [5GHz]

The items that can be set are as follows.

- [AUTO], [CH36], [CH40], [CH44], [CH48], [CH100], [CH104], [CH108], [CH112], [CH116], [CH132], [CH136], [CH140], [CH149], [CH153], [CH157], [CH161], [CH165]

(Factory setting: [AUTO])

NOTE

- Some items may not be able to select depending on the used wireless module.

[ENCRYPTION]

Sets the encryption method when the [NETWORK] menu → [WLAN PROPERTY] → [TYPE] → [INFRA(SELECT)]/[INFRA(MANUAL)] is selected.
The items that can be set are as follows.
- [WPA-TKIP], [WPA-AES], [WPA2-TKIP], [WPA2-AES], [NONE]

(Factory setting: [WPA2-AES])

NOTE

- The setting is fixed to [WPA2-AES] when the [NETWORK] menu → [WLAN PROPERTY] → [TYPE] → [DIRECT] is set.

[ENCRYPT KEY]

Sets the encryption key. Set the key using a string of 8 to 63 characters or a hexadecimal number with 64 digits.
(Factory setting: [0123456789012345678 9abcdef])

[IPv4 SETTING]

[DHCP]	Sets whether to use the automatic acquisition through DHCP or to use the DHCP server function of the camera. [OFF]: Does not use DHCP. [CLIENT]: Performs automatic acquisition through DHCP if connecting by setting [WLAN PROPERTY] → [TYPE] → [INFRA(SELECT)]/[INFRA(MANUAL)]. [SERVER]: Enables the DHCP server function of the camera when connecting by setting [WLAN PROPERTY] → [TYPE] → [DIRECT]. • Factory setting: [OFF]
[IP ADDRESS]	Sets the IP address. • Factory setting: [192.168.0.1] **NOTE** - Cannot be set when [WLAN PROPERTY] → [IPv4 SETTING] → [DHCP] → [CLIENT] is selected.
[SUBNET MASK]	Sets the subnet mask. • Factory setting: [255.255.255.0] **NOTE** - Cannot be set when [WLAN PROPERTY] → [IPv4 SETTING] → [DHCP] → [CLIENT] is selected.
[DEFAULT GATEWAY]	Sets the default gateway. • Factory setting: [192.168.0.254] **NOTE** - If you do not use default gateway, set to [0.0.0.0]. - Cannot be set when [WLAN PROPERTY] → [IPv4 SETTING] → [DHCP] → [CLIENT] is selected. - Disables the setting for the default gateway when [WLAN PROPERTY] → [TYPE] → [DIRECT] is selected.
[PRIMARY DNS]	Sets the primary DNS server. • Factory setting: [0.0.0.0] **NOTE** - Disables the setting for the primary DNS server when [WLAN PROPERTY] → [TYPE] → [DIRECT] is selected.
[SECONDARY DNS]	Sets the secondary DNS server. • Factory setting: [0.0.0.0] **NOTE** - Disables the setting for the secondary DNS server when [WLAN PROPERTY] → [TYPE] → [DIRECT] is selected.

[INFORMATION]

[STATUS]

Displays the status of the network function.

[UTILITY]

Performs the various operations related to the network function.

[NETWORK INITIALIZE]

Restores the network setting status to the factory settings.

[NET CHECKER]

Checks network connection status.

[EASY IP SETTING]

Sets the time to accept EASY IP Setup Software.

The items that can be set are as follows.

- [DISABLE], [20 MIN.], [UNLIMITED]

(Factory setting: [DISABLE])

NOTE

- This is fixed to [UNLIMITED] when [USB TETHERING] is selected in [DEVICE SEL].
- This is fixed to [UNLIMITED] when [NDI|HX] is selected in [NETWORK FUNC].

[EASY IP CAMERA TITLE]

Configure the individual device names to display in EASY IP Setup Software. (15 characters or less)

The camera title set here is also displayed as the individual device name in the NDI|HX compatible switcher and the CX ROP app.

(Factory setting: [AG-CX350])

[SYSTEM] menu

Configure the settings regarding the recording format of video and audio.

[FREQUENCY]

Sets the system frequency.

The items that can be set are as follows.

- [59.94Hz], [50.00Hz]

(Factory setting: [50.00Hz])

NOTE

- The camera will restart when the setting is changed.

[FILE FORMAT]

Sets the file format for recording.

[P2]	Sets to record in the MXF file format of P2 format.
[MOV]	Sets to record in the MOV file format of MOV format.
[AVCHD]	Sets to record in the MTS file format of AVCHD format.

(Factory setting: [MOV])

[REC FORMAT]

Sets the signal format and codec mode for recording.

- When [FREQUENCY] is set to [50.00Hz], and [FILE FORMAT] is set to [P2]

  The items that can be set are as follows.

  - [1080-50.00p/AVC-I100], [1080-50.00p/AVC-I422], [1080-50.00p/AVC-G25], [1080-50.00p/AVC-G12], [1080-50.00i/AVC-I200], [1080-50.00i/AVC-I100], [1080-50.00i/AVC-I50], [1080-50.00i/AVC-G50], [1080-50.00i/AVC-G25], [1080-50.00i/AVC-G12], [720-50.00p/AVC-I200], [720-50.00p/AVC-I100], [720-50.00p/AVC-I50], [720-50.00p/AVC-G50], [720-50.00p/AVC-G25], [720-50.00p/AVC-G12]
- When [FREQUENCY] is set to [50.00Hz], and [FILE FORMAT] is set to [MOV]

  The items that can be set are as follows.

  - [2160-50.00p/420LongGOP 150M], [2160-50.00p/HEVC LongGOP 200M], [2160-50.00p/HEVC LongGOP 100M], [2160-25.00p/420LongGOP 100M], [2160-25.00p/HEVC LongGOP 150M], [2160-25.00p/422LongGOP 150M], [2160-25.00p/422ALL-I 400M], [1080-50.00p/422LongGOP 100M], [1080-50.00p/422ALL-I 200M], [1080-50.00i/422LongGOP 50M], [1080-50.00i/422ALL-I 100M], [1080-25.00p/422LongGOP 50M], [1080-25.00p/422ALL-I 100M]

  (Factory setting: [1080-50.00i/422ALL-I 100M])
- When [FREQUENCY] is [50.00Hz] and [FILE FORMAT] is [AVCHD]

  The items that can be set are as follows.

  - [1080-50.00p/AVCHD PS], [1080-50.00i/AVCHD PH], [1080-50.00i/AVCHD HA], [720-50.00p/AVCHD PM], [576-50.00i/AVCHD SA]

  (Factory setting: [1080-50.00i/AVCHD PH])
- When [FREQUENCY] is set to [59.94Hz], and [FILE FORMAT] is set to [P2]

  The items that can be set are as follows.

  - [1080-59.94p/AVC-I100], [1080-59.94p/AVC-I422], [1080-59.94p/AVC-G25], [1080-59.94p/AVC-G12], [1080-59.94i/AVC-I200], [1080-59.94i/AVC-I100], [1080-59.94i/AVC-I50], [1080-59.94i/AVC-G50], [1080-59.94i/AVC-G25], [1080-59.94i/AVC-G12], [720-59.94p/AVC-I200], [720-59.94p/AVC-I100], [720-59.94p/AVC-I50], [720-59.94p/AVC-G50], [720-59.94p/AVC-G25], [720-59.94p/AVC-G12]
- When [FREQUENCY] is set to [59.94Hz], and [FILE FORMAT] is set to [MOV]

  The items that can be set are as follows.

  - [2160-59.94p/420LongGOP 150M], [2160-59.94p/HEVC LongGOP 200M], [2160-59.94p/HEVC LongGOP 100M], [2160-29.97p/420LongGOP 100M], [2160-29.97p/HEVC LongGOP 150M], [2160-29.97p/422LongGOP 150M], [2160-29.97p/422ALL-I 400M], [2160-23.98p/420LongGOP 100M], [2160-23.98p/HEVC LongGOP 150M], [2160-23.98p/422LongGOP 150M], [2160-23.98p/422ALL-I 400M], [1080-59.94p/422LongGOP 100M], [1080-59.94p/422ALL-I 200M], [1080-59.94i/422LongGOP 50M], [1080-59.94i/422ALL-I 100M], [1080-29.97p/422LongGOP 50M], [1080-29.97p/422ALL-I 100M], [1080-23.98p/422LongGOP 50M], [1080-23.98p/422ALL-I 100M]

  (Factory setting: [1080-59.94i/422ALL-I 100M])
- When [FREQUENCY] is [59.94Hz] and [FILE FORMAT] is [AVCHD]

  The items that can be set are as follows.

- [1080-59.94p/AVCHD PS], [1080-59.94i/AVCHD PH], [1080-59.94i/AVCHD HA], [1080-23.98p/AVCHD PH], [720-59.94p/AVCHD PM], [480-59.94i/AVCHD SA]

(Factory setting: [1080-59.94i/AVCHD PH])

[AUDIO SAMPLE RES.]

Sets the number of bits of the audio to record when recording format is AVC-Intra 100/AVC-Intra 50.
In other recording formats, audio is recorded with number of bits fixed to 16 bits or 24 bits.
The items that can be set are as follows.

- [16BIT], [24BIT]

(Factory setting: [16BIT])

[ASPECT]

Sets the aspect ratio of the video to record in the SD signal format (480i and 576i).

[4:3]	Records using standard 4:3 mode. Cut both the left and right edges.
[16:9]	Camera images are compressed in the horizontal direction when recording. Replaying recorded images on a TV monitor that supports a wide screen will convert the images to an aspect ratio of 16:9.

(Factory setting: [4:3])

[SUPER SLOW]

Sets the super slow recording. Enable this setting to shoot slow motion video.
The items that can be set are as follows.

- [ON], [OFF]

(Factory setting: [OFF])

NOTE

- This setting is fixed to [OFF] when anything other than the [SYSTEM] menu → [FILE FORMAT] → [MOV] is set.
- This setting is fixed to [OFF] when the [SYSTEM] menu → [REC FORMAT] is set to anything other than 1920×1080.
- This setting is fixed to [OFF] when the [SYSTEM] menu → [REC FORMAT] is set to 59.94i/50.00i.

[SHOOTING MODE]

Sets the shooting mode according to the shooting environment.

[NORMAL]	Selects the shooting mode for an environment at normal brightness.
[HIGH SENS.]	Selects high-sensitivity. (Appropriate when shooting in a dark environment.) [H.SENS.] is displayed in the camera image screen.

(Factory setting: [NORMAL])

NOTE

- The setting is fixed to [NORMAL] when the [CAMERA] menu → [SW MODE] → [GAIN/ISO MODE] is set to [ISO].

[COLOR SETTING]

Sets the color of the recording image (entire camera system).

[NORMAL]	Adjusts the detailed image quality on the camera.
[V-Log]	Sets the gamma curve that obtains gradation and wider latitude (exposure range). Color grading process is required after recording.

(Factory setting: [NORMAL])

[OTHERS] menu

Configures the settings for writing/loading/initializing user files to the internal memory and other settings of the camera.

[FILE]

Saves and loads the setting data.
For the saving and loading target, refer to “Target items for scene file/setup file/initialization” (page 111).
For details about saving and loading, refer to “Handling setting data” (page 119).

[SCENE FILE(SD CARD)]

Loads or saves scene files on a memory card.

[LOAD]	Selects and loads the scene file saved on the memory card into the camera. Can select if all of the scene files ([F1:] to [F6:]) are loaded, or individually loaded.
[SAVE]	The setting values of the current scene file ([F1:] to [F6:]) are overwritten to the file selected from the list of scene files saved in the memory card.
[SAVE AS]	The setting values of the current scene file ([F1:] to [F6:]) is saved to the memory card as a new scene file by entering the file name.

[SETUP FILE(SD CARD)]

Loads or saves setup files on a memory card.

[LOAD]	Selects the setup file saved on the memory card to load on the camera.
[SAVE]	Overwrites the file selected in the list of the setup files saved on the memory card with the current setting values of the camera.
[SAVE AS]	Enter a file name to save the current setting values in the camera as a new setup file in the memory card.

[SETUP FILE(MEMORY)]

Loads/saves/initializes setup files in the internal memory of the camera.

[LOAD]	Loads setup data saved on the memory.
[SAVE]	Saves the setup data to the memory.
[INITIALIZE]	Restores the factory settings from the current settings for the menus in the setup data.

[SLOT FOR LOAD/SAVE]

Sets the card slot to load and save the scene file, setup file, and streaming setting file.
The items that can be set are as follows.
- [SLOT1], [SLOT2]

(Factory setting: [SLOT1])

[COLOR BARS]

[COLOR BARS TYPE]

Sets the color bar to be used.

[SMPTE]	Uses the color bars in SMPTE standard.
[FULL]	Uses the full color bars.

(Factory setting: [SMPTE])

NOTE

- A smear may occur depending on the output resolution.

[TEST TONE]

Sets whether the audio test signal (tone signal with specification level 1 kHz) is output when the video is switched to the color bar.
The standard level varies depending on the setting of the [AUDIO] menu → [REC CH SETTINGS] → [HEAD ROOM].
The items that can be set are as follows.
- [ON], [OFF]

(Factory setting: [ON])

[LED]

[TALLY LED]

Sets whether the tally lamp is to illuminate or not.

[FRONT]	The front tally lamp will illuminate.
[REAR]	The rear tally lamp will illuminate.
[BOTH]	Both the front and rear tally lamps will illuminate.
[OFF]	The tally lamp will not illuminate.

(Factory setting: [BOTH])

[REC TALLY]

Sets whether the tally lamp is to illuminate or not when recording with the camera.
The items that can be set are as follows.
- [ON], [OFF]

(Factory setting: [ON])

[ACCESS LED]

Sets whether the card access lamp is to illuminate or not.
The items that can be set are as follows.
- [ON], [OFF]

(Factory setting: [ON])

[CLOCK]

[CLOCK SETTING]

Sets the calendar (date of the built-in clock) and time.

Year	[2018]…[2037]

Month	[JAN]…[DEC] ([1]…[12])
Day	[1]…[31] ([28], [29], [30])
Hour	[0]…[23]
Minute	[0]…[59]

[TIME ZONE]

Sets the time zone. It will switch to the time with the time difference added when the time zone setting is changed.

The items that can be set are as follows.

- [–12:00]…[+12:30] (30 minutes steps), [+12:45], [+13:00]

(Factory setting: [+0:00])

[DATE FORMAT]

Sets the display order of the year, month, and date of the calendar (date of the built-in clock). This is reflected to the date display of the clip information.

The items that can be set are as follows.

- [Y-M-D], [M-D-Y], [D-M-Y]

(Factory setting: [D-M-Y])

[USB DEVICE]

[CARD READER MODE]

Switches the camera to the card reader mode. A computer or other device can be connected via USB to use as a card reader of the memory card.

The LCD monitor turns off after approximately five to ten seconds when using the battery.

The screen will return to the card reader mode screen when the <◀◀> button, <■> button, <▶▶> button, or <▶/❚❚> button is pressed, or the multidial is turned up or down.

The card reader mode is ended and the screen will display the camera image screen when the <SET> button is pressed or the multidial is pressed.

The items that can be selected are as follows.

- [YES], [NO]

[SERVICE MODE]

Switches the camera to the service mode.

You can also check software information (licenses) on a computer and other equipment. Confirm “LICENSE.TXT” for the external drive recognized by a computer.

The LCD monitor turns off after approximately five to ten seconds when using the battery.

The screen will return to the service mode screen when the <◀◀> button, <■> button, <▶▶> button, or <▶/❚❚> button is pressed, or the multidial is turned up or down.

The service mode is ended and the screen will display the camera image screen when the <SET> button is pressed or the multidial is pressed.

The items that can be selected are as follows.

- [YES], [NO]

[INFORMATION]

Displays the information of the camera.

[VERSION]

Displays the information of the camera.

[MODEL]	Displays the product name of the camera.
[SERIAL NO.]	Displays the serial number of the camera.
[NETWORK ID(MAC ADDRESS)]	Displays the MAC address for the <LAN> terminal of the camera.
[VERSION]	Displays the firmware version of the camera.

[OPERATION TIME]

[TOTAL OPERATION]	Displays the total operation time.

[UPDATE]

Updates the firmware.

Insert the memory card where the update file is saved into card slot 1.

The items that can be selected are as follows.

- [YES], [NO]

[LANGUAGE]

Sets the display language.

[English]	English
[Español]	Spanish
[Français]	French
[Deutsch]	German
[Italiano]	Italian

[Русский]	Russian
[Nederland]	Dutch
[Türkçe]	Turkish
[Svenska]	Swedish
[Polski]	Polish
[Česky]	Czech
[Magyar]	Hungarian

(Factory setting: [English])

[MENU INITIALIZE]

Returns the setting value of the menu to the factory setting. The camera is restarted after executing.

The items that can be selected are as follows.

- [YES], [NO]

Factory setting value of the scene file

[SCENE FILE] menu

The factory settings of the [SCENE FILE] menu and the items that can be selected differ depending on the [SCENE FILE] menu → [FILE SELECT] setting.

- Meaning of the symbols used in the table are as follows.
  (Factory setting: [F1:])
  - —: Not a target.

Item	[FILE SELECT]					
	[F1:]	[F2:FLUO.]	[F3:SPARK]	[F4:B.STR]	[F5:CINE]	[F6:HLG]
[VFR]	[OFF]	[OFF]	[OFF]	[OFF]	[OFF]	[OFF]
[FRAME RATE]	[24fps]*1 [25fps]*2	[24fps]*1 [25fps]*2	[24fps]*1 [25fps]*2	[24fps]*1 [25fps]*2	[24fps]*1 [25fps]*2	[24fps]*1 [25fps]*2
[SYNC SCAN TYPE]	[sec]	[sec]	[sec]	[sec]	[sec]	[sec]
[SYNC SCAN]	[1/60.0]*3[1/50.0]*4[180.0d]*5	[1/60.0]*3[1/50.0]*4[180.0d]*5	[1/60.0]*3[1/50.0]*4[180.0d]*5	[1/60.0]*3[1/50.0]*4[180.0d]*5	[1/60.0]*3[1/50.0]*4[180.0d]*5	[1/60.0]*3[1/50.0]*4[180.0d]*5
[MASTER DTL]	[0]	[0]	[8]	[0]	[0]	[0]
[DTL CORING]	[15]	[15]	[25]	[15]	[15]	[15]
[DETAIL SETTING]						
[DETAIL]	[ON]	[ON]	[ON]	[ON]	[ON]	[ON]
[V.DTL LEVEL]	[0]	[0]	[0]	[0]	[0]	[0]
[DTL FREQ.]	[0]	[0]	[0]	[0]	[0]	[0]
[LEVEL DEPEND.]	[0]	[0]	[0]	[0]	[0]	[0]
[KNEE APE LVL]	[2]	[2]	[2]	[2]	[2]	[2]
[DTL GAIN(+)]	[0]	[0]	[0]	[0]	[0]	[0]
[DTL GAIN(–)]	[0]	[0]	[0]	[0]	[0]	[0]
[SKIN TONE DTL A]	[OFF]	[OFF]	[OFF]	[OFF]	[OFF]	[OFF]
[SKIN TONE DTL B]	[OFF]	[OFF]	[OFF]	[OFF]	[OFF]	[OFF]
[SKIN TONE DTL C]	[OFF]	[OFF]	[OFF]	[OFF]	[OFF]	[OFF]
[SKIN TONE ZEBRA]	[ON]	[ON]	[ON]	[ON]	[ON]	[ON]
[SKIN TONE DTL SETTING]						
[DETECT TABLE]	[A]	[A]	[A]	[A]	[A]	[A]
[SKIN DTL EFFECT]	[16]	[16]	[16]	[16]	[16]	[16]
[I CENTER]	[35]	[35]	[35]	[35]	[35]	[35]
[I WIDTH]	[2]	[2]	[2]	[2]	[2]	[2]
[Q WIDTH]	[2]	[2]	[2]	[2]	[2]	[2]
[Q PHASE]	[0]	[0]	[0]	[0]	[0]	[0]
[RB GAIN CONTROL SETTING]						
[R GAIN AWB PRE]	[0]	[0]	[0]	[0]	[0]	[0]
[B GAIN AWB PRE]	[0]	[0]	[0]	[0]	[0]	[0]
[R GAIN AWB A]	[0]	[0]	[0]	[0]	[0]	[0]
[B GAIN AWB A]	[0]	[0]	[0]	[0]	[0]	[0]
[R GAIN AWB B]	[0]	[0]	[0]	[0]	[0]	[0]
[B GAIN AWB B]	[0]	[0]	[0]	[0]	[0]	[0]
[AWB A GAIN OFFSET]	[OFF]	[OFF]	[OFF]	[OFF]	[OFF]	[OFF]
[AWB B GAIN OFFSET]	[OFF]	[OFF]	[OFF]	[OFF]	[OFF]	[OFF]
[COLOR TEMP Ach SETTING]						
[COLOR TEMP]	[3200K]	[3200K]	[3200K]	[3200K]	[3200K]	[3200K]
[R GAIN]	[0]	[0]	[0]	[0]	[0]	[0]
[B GAIN]	[0]	[0]	[0]	[0]	[0]	[0]
[G AXIS]	[0]	[0]	[0]	[0]	[0]	[0]
[COLOR TEMP Bch SETTING]						
[COLOR TEMP]	[3200K]	[3200K]	[3200K]	[3200K]	[3200K]	[3200K]
[R GAIN]	[0]	[0]	[0]	[0]	[0]	[0]
[B GAIN]	[0]	[0]	[0]	[0]	[0]	[0]
[G AXIS]	[0]	[0]	[0]	[0]	[0]	[0]
[CHROMA LEVEL]	[0%]	[0%]	[0%]	[0%]	[0%]	[0%]
[CHROMA PHASE]	[0]	[0]	[0]	[0]	[0]	[0]
[MATRIX]						
[MATRIX TYPE]	[NORMAL1]	[FLUO.]	[NORMAL2]	[NORMAL1]	[CINELIKE]	[NORMAL1]
[ADAPTIVE MATRIX]	[OFF]	[OFF]	[OFF]	[OFF]	[OFF]	[OFF]
[MATRIX SETTING]						

Item	[FILE SELECT]					
	[F1:]	[F2:FLUO.]	[F3:SPARK]	[F4:B.STR]	[F5:CINE]	[F6:HLG]
[R-G]	[0]	[0]	[0]	[0]	[0]	[0]
[R-B]	[0]	[0]	[0]	[0]	[0]	[0]
[G-R]	[0]	[0]	[0]	[0]	[0]	[0]
[G-B]	[0]	[0]	[0]	[0]	[0]	[0]
[B-R]	[0]	[0]	[0]	[0]	[0]	[0]
[B-G]	[0]	[0]	[0]	[0]	[0]	[0]
[COLOR CORRECTION]						
[R] ([SAT])	[0]	[0]	[0]	[0]	[0]	[0]
[R] ([PHASE])	[0]	[0]	[0]	[0]	[0]	[0]
[R-R-Mg] ([SAT])	[0]	[0]	[0]	[0]	[0]	[0]
[R-R-Mg] ([PHASE])	[0]	[0]	[0]	[0]	[0]	[0]
[R-Mg] ([SAT])	[0]	[0]	[0]	[0]	[0]	[0]
[R-Mg] ([PHASE])	[0]	[0]	[0]	[0]	[0]	[0]
[Mg] ([SAT])	[0]	[0]	[0]	[0]	[0]	[0]
[Mg] ([PHASE])	[0]	[0]	[0]	[0]	[0]	[0]
[Mg-B] ([SAT])	[0]	[0]	[0]	[0]	[0]	[0]
[Mg-B] ([PHASE])	[0]	[0]	[0]	[0]	[0]	[0]
[B] ([SAT])	[0]	[0]	[0]	[0]	[0]	[0]
[B] ([PHASE])	[0]	[0]	[0]	[0]	[0]	[0]
[B-Cy] ([SAT])	[0]	[0]	[0]	[0]	[0]	[0]
[B-Cy] ([PHASE])	[0]	[0]	[0]	[0]	[0]	[0]
[Cy] ([SAT])	[0]	[0]	[0]	[0]	[0]	[0]
[Cy] ([PHASE])	[0]	[0]	[0]	[0]	[0]	[0]
[Cy-G] ([SAT])	[0]	[0]	[0]	[0]	[0]	[0]
[Cy-G] ([PHASE])	[0]	[0]	[0]	[0]	[0]	[0]
[G] ([SAT])	[0]	[0]	[0]	[0]	[0]	[0]
[G] ([PHASE])	[0]	[0]	[0]	[0]	[0]	[0]
[G-Yl] ([SAT])	[0]	[0]	[0]	[0]	[0]	[0]
[G-Yl] ([PHASE])	[0]	[0]	[0]	[0]	[0]	[0]
[G-Yl-Yl] ([SAT])	[0]	[0]	[0]	[0]	[0]	[0]
[G-Yl-Yl] ([PHASE])	[0]	[0]	[0]	[0]	[0]	[0]
[Yl] ([SAT])	[0]	[0]	[0]	[0]	[0]	[0]
[Yl] ([PHASE])	[0]	[0]	[0]	[0]	[0]	[0]
[Yl-Yl-R] ([SAT])	[0]	[0]	[0]	[0]	[0]	[0]
[Yl-Yl-R] ([PHASE])	[0]	[0]	[0]	[0]	[0]	[0]
[Yl-R] ([SAT])	[0]	[0]	[0]	[0]	[0]	[0]
[Yl-R] ([PHASE])	[0]	[0]	[0]	[0]	[0]	[0]
[Yl-R-R] ([SAT])	[0]	[0]	[0]	[0]	[0]	[0]
[Yl-R-R] ([PHASE])	[0]	[0]	[0]	[0]	[0]	[0]
[MASTER PED]	[16]	[16]	[16]	[16]	[16]	[16]
[RGB BLACK CONTROL SETTING]						
[R PED]	[0]	[0]	[0]	[0]	[0]	[0]
[G PED]	[0]	[0]	[0]	[0]	[0]	[0]
[B PED]	[0]	[0]	[0]	[0]	[0]	[0]
[PEDESTAL OFFSET]	[OFF]	[OFF]	[OFF]	[OFF]	[OFF]	[OFF]
[GAMMA MODE SEL]	[HD]	[HD]	[HD]	[HD]	[FILMLIKE3]	[HLG]
[GAMMA SETTING]						
[MASTER GAMMA]	[0.45]	[0.45]	[0.45]	[0.45]	[0.45]	[0.45]
[F-REC DYNAMIC LVL]	[600%]	[600%]	[600%]	[600%]	[600%]	[600%]
[F-REC BLACK STR LVL]	[0%]	[0%]	[0%]	[0%]	[0%]	[0%]
[V-REC KNEE SLOPE]	[500%]	[500%]	[500%]	[500%]	[500%]	[500%]
[V-REC KNEE POINT]	[30%]	[30%]	[30%]	[30%]	[30%]	[30%]
[BLACK GAMMA]	[0]	[0]	[–4]	[6]	[0]	[0]
[B.GAMMA RANGE]	[1]	[1]	[2]	[2]	[1]	[1]
[KNEE SETTING]						
[KNEE MODE]	[AUTO]	[AUTO]	[AUTO]	[AUTO]	[AUTO]	[AUTO]

Item	[FILE SELECT]					
	[F1:]	**[F2:FLUO.]**	**[F3:SPARK]**	**[F4:B.STR]**	**[F5:CINE]**	**[F6:HLG]**
[A.KNEE RESPONSE]	[4]	[4]	[4]	[4]	[4]	[4]
[KNEE POINT]	[93.0%]	[93.0%]	[93.0%]	[93.0%]	[93.0%]	[93.0%]
[KNEE SLOPE]	[99]	[99]	[99]	[99]	[99]	[99]
[HLG KNEE SW]	[OFF]	[OFF]	[OFF]	[OFF]	[OFF]	[OFF]
[HLG KNEE POINT]	[55]	[55]	[55]	[55]	[55]	[55]
[HLG KNEE SLOPE]	[10]	[10]	[10]	[10]	[10]	[10]
[WHITE CLIP SETTING]						
[WHITE CLIP]	[ON]	[ON]	[ON]	[ON]	[ON]	[ON]
[WHITE CLIP LEVEL]	[109%]	[109%]	[109%]	[109%]	[109%]	[109%]
[DRS]	[OFF]	[OFF]	[OFF]	[OFF]	[OFF]	[OFF]
[DRS EFFECT DEPTH]	[1]	[1]	[1]	[1]	[1]	[1]
[DNR]	[1]	[1]	[1]	[1]	[1]	[1]
[A.IRIS LEVEL]	[ON]	[ON]	[ON]	[ON]	[ON]	[ON]
[A.IRIS LEVEL EFFECT]	[0]	[0]	[0]	[0]	[0]	[0]

*1 When the [SYSTEM] menu → [FREQUENCY] is set to [59.94Hz]
*2 When the [SYSTEM] menu → [FREQUENCY] is set to [50.00Hz]
*3 When the [SCENE FILE] menu → [SYNC SCAN TYPE] is set to [sec] and the [SYSTEM] menu → [FREQUENCY] is set to [59.94Hz]
*4 When the [SCENE FILE] menu → [SYNC SCAN TYPE] is set to [sec] and the [SYSTEM] menu → [FREQUENCY] is set to [50.00Hz]
*5 When the [SCENE FILE] menu → [SYNC SCAN TYPE] is set to [deg]

Target items for scene file/setup file/initialization

- SCENE: Items saved in scene files.
- SETUP: Items saved in setup files.
- INITIALIZE: Items that are initialized with the [OTHERS] menu → [MENU INITIALIZE].
- Meaning of the symbols used in the table are as follows.
  - ✓: Is a target.
  - —: Not a target.

[THUMBNAIL] menu

Item		SCENE	SETUP	INITIALIZE
[PLAYBACK]	[CLIP SEL]	—	—	✓
	[RESUME PLAY]	—	✓	✓
[CLIP]	[PROTECT]	—	—	—
	[DELETE]	—	—	—
	[COPY]	—	—	—
	[REPAIR]	—	—	—
	[RE-CONNECT]	—	—	—
	[INFORMATION]	—	—	—
[DISPLAY]	[DATA]	—	✓	✓

[CAMERA] menu

Item		SCENE	SETUP	INITIALIZE
[SW MODE]	[LOW GAIN]	—	✓	✓
	[MID GAIN]	—	✓	✓
	[HIGH GAIN]	—	✓	✓
	[SUPER GAIN]	—	✓	✓
	[GAIN/ISO MODE]	—	✓	✓
	[O.I.S.]	—	✓	✓
	[HYBRID O.I.S.]	—	✓	✓
	[O.I.S. MODE]	—	✓	✓
	[ATW]	—	✓	✓
	[ATW SPEED]	—	✓	✓
	[ATW TARGET R]	—	✓	✓
	[ATW TARGET B]	—	✓	✓
	[W.BAL PRESET]	—	✓	✓
	[W.BAL VAR]	—	✓	✓
	[H.ZOOM SPEED]	—	✓	✓
	[i.ZOOM]	—	✓	✓
	[MF ASSIST]	—	✓	✓
	[MACRO]	—	✓	✓
	[AF AREA WIDTH]	—	✓	✓
	[A.IRIS SPEED]	—	✓	✓
	[A.IRIS WINDOW]	—	✓	✓
	[AREA MODE]	—	✓	✓
	[FACE DETECT/TRACKING MODE]	—	✓	✓
	[IR REC]	—	✓	✓
[AUTO SW]	[A.IRIS]	—	✓	✓
	[AGC]	—	✓	✓
	[AGC LIMIT]	—	✓	✓
	[AGC POINT]	—	✓	✓
	[A.SHUTTER]	—	✓	✓
	[A.SHUTTER LIMIT]	—	✓	✓
	[A.SHUTTER POINT]	—	✓	✓
	[ATW]	—	✓	✓
	[AF]	—	✓	✓
[USER SW]	[USER1]	—	✓	✓
	[USER2]	—	✓	✓
	[USER3]	—	✓	✓
	[USER4]	—	✓	✓
	[USER5]	—	✓	✓

Item		SCENE	SETUP	INITIALIZE
	[USER6]	—	✓	✓
	[USER7]	—	✓	✓
	[USER8]	—	✓	✓
	[USER9]	—	✓	✓
	[USER10]	—	✓	✓
	[USER11]	—	✓	✓
	[USER12]	—	✓	✓

[SCENE FILE] menu

Item		SCENE	SETUP	INITIALIZE
[NAME EDIT]		✓	—	✓
[LOAD/SAVE/INITIALIZE]		—	—	—
[VFR]		✓	—	✓
[FRAME RATE]		✓	—	✓
[SYNC SCAN TYPE]		✓	—	✓
[SYNC SCAN]		✓	—	✓
[MASTER DTL]		✓	—	✓
[DTL CORING]		✓	—	✓
[DETAIL SETTING]	[DETAIL]	✓	—	✓
	[V.DTL LEVEL]	✓	—	✓
	[DTL FREQ.]	✓	—	✓
	[LEVEL DEPEND.]	✓	—	✓
	[KNEE APE LVL]	✓	—	✓
	[DTL GAIN(+)]	✓	—	✓
	[DTL GAIN(–)]	✓	—	✓
[SKIN TONE DTL A]		✓	—	✓
[SKIN TONE DTL B]		✓	—	✓
[SKIN TONE DTL C]		✓	—	✓
[SKIN TONE ZEBRA]		✓	—	✓
[SKIN TONE DTL SETTING]	[DETECT TABLE]	✓	—	✓
	[SKIN DTL EFFECT]	✓	—	✓
	[I CENTER]	✓	—	✓
	[I WIDTH]	✓	—	✓
	[Q WIDTH]	✓	—	✓
	[Q PHASE]	✓	—	✓
[RB GAIN CONTROL SETTING]	[R GAIN AWB PRE]	✓	—	✓
	[B GAIN AWB PRE]	✓	—	✓
	[R GAIN AWB A]	✓	—	✓
	[B GAIN AWB A]	✓	—	✓
	[R GAIN AWB B]	✓	—	✓
	[B GAIN AWB B]	✓	—	✓
	[AWB A GAIN OFFSET]	✓	—	✓
	[AWB B GAIN OFFSET]	✓	—	✓
[COLOR TEMP Ach SETTING]	[COLOR TEMP]	✓	—	✓
	[R GAIN]	✓	—	✓
	[B GAIN]	✓	—	✓
	[G AXIS]	✓	—	✓
[COLOR TEMP Bch SETTING]	[COLOR TEMP]	✓	—	✓
	[R GAIN]	✓	—	✓
	[B GAIN]	✓	—	✓
	[G AXIS]	✓	—	✓
[CHROMA LEVEL]		✓	—	✓
[CHROMA PHASE]		✓	—	✓
[MATRIX]	[MATRIX TYPE]	✓	—	✓
	[ADAPTIVE MATRIX]	✓	—	✓
[MATRIX SETTING]	[R-G]	✓	—	✓

Item		SCENE	SETUP	INITIALIZE
	[R-B]	✓	—	✓
	[G-R]	✓	—	✓
	[G-B]	✓	—	✓
	[B-R]	✓	—	✓
	[B-G]	✓	—	✓
[COLOR CORRECTION]	[R] ([SAT])	✓	—	✓
	[R] ([PHASE])	✓	—	✓
	[R-R-Mg] ([SAT])	✓	—	✓
	[R-R-Mg] ([PHASE])	✓	—	✓
	[R-Mg] ([SAT])	✓	—	✓
	[R-Mg] ([PHASE])	✓	—	✓
	[Mg] ([SAT])	✓	—	✓
	[Mg] ([PHASE])	✓	—	✓
	[Mg-B] ([SAT])	✓	—	✓
	[Mg-B] ([PHASE])	✓	—	✓
	[B] ([SAT])	✓	—	✓
	[B] ([PHASE])	✓	—	✓
	[B-Cy] ([SAT])	✓	—	✓
	[B-Cy] ([PHASE])	✓	—	✓
	[Cy] ([SAT])	✓	—	✓
	[Cy] ([PHASE])	✓	—	✓
	[Cy-G] ([SAT])	✓	—	✓
	[Cy-G] ([PHASE])	✓	—	✓
	[G] ([SAT])	✓	—	✓
	[G] ([PHASE])	✓	—	✓
	[G-Yl] ([SAT])	✓	—	✓
	[G-Yl] ([PHASE])	✓	—	✓
	[G-Yl-Yl] ([SAT])	✓	—	✓
	[G-Yl-Yl] ([PHASE])	✓	—	✓
	[Yl] ([SAT])	✓	—	✓
	[Yl] ([PHASE])	✓	—	✓
	[Yl-Yl-R] ([SAT])	✓	—	✓
	[Yl-Yl-R] ([PHASE])	✓	—	✓
	[Yl-R] ([SAT])	✓	—	✓
	[Yl-R] ([PHASE])	✓	—	✓
	[Yl-R-R] ([SAT])	✓	—	✓
	[Yl-R-R] ([PHASE])	✓	—	✓
[MASTER PED]		✓	—	✓
[RGB BLACK CONTROL SETTING]	[R PED]	✓	—	✓
	[G PED]	✓	—	✓
	[B PED]	✓	—	✓
	[PEDESTAL OFFSET]	✓	—	✓
[GAMMA MODE SEL]		✓	—	✓
[GAMMA SETTING]	[MASTER GAMMA]	✓	—	✓
	[F-REC DYNAMIC LVL]	✓	—	✓
	[F-REC BLACK STR LVL]	✓	—	✓
	[V-REC KNEE SLOPE]	✓	—	✓
	[V-REC KNEE POINT]	✓	—	✓
	[BLACK GAMMA]	✓	—	✓
	[B.GAMMA RANGE]	✓	—	✓
[KNEE SETTING]	[KNEE MODE]	✓	—	✓
	[A.KNEE RESPONSE]	✓	—	✓
	[KNEE POINT]	✓	—	✓
	[KNEE SLOPE]	✓	—	✓
	[HLG KNEE SW]	✓	—	✓
	[HLG KNEE POINT]	✓	—	✓
	[HLG KNEE SLOPE]	✓	—	✓
[WHITE CLIP SETTING]	[WHITE CLIP]	✓	—	✓
	[WHITE CLIP LEVEL]	✓	—	✓

Item		SCENE	SETUP	INITIALIZE
[DRS]		✓	—	✓
[DRS EFFECT DEPTH]		✓	—	✓
[DNR]		✓	—	✓
[A.IRIS LEVEL]		✓	—	✓
[A.IRIS LEVEL EFFECT]		✓	—	✓

[AUDIO] menu

Item		SCENE	SETUP	INITIALIZE
[INPUT SETTINGS]	[INPUT1 MIC LEVEL]	—	✓	✓
	[INPUT2 MIC LEVEL]	—	✓	✓
	[INPUT1 LINE LEVEL]	—	✓	✓
	[INPUT2 LINE LEVEL]	—	✓	✓
[REC CH SETTINGS]	[CH1 LEVEL]	—	✓	✓
	[CH2 LEVEL]	—	✓	✓
	[CH3 LEVEL]	—	✓	✓
	[CH4 LEVEL]	—	✓	✓
	[CH3 LEVEL CONTROL]	—	✓	✓
	[CH4 LEVEL CONTROL]	—	✓	✓
	[CH1 MIC LOWCUT]	—	✓	✓
	[CH2 MIC LOWCUT]	—	✓	✓
	[CH3 MIC LOWCUT]	—	✓	✓
	[CH4 MIC LOWCUT]	—	✓	✓
	[CH1 LIMITER]	—	✓	✓
	[CH2 LIMITER]	—	✓	✓
	[CH3 LIMITER]	—	✓	✓
	[CH4 LIMITER]	—	✓	✓
	[HEAD ROOM]	—	✓	✓
[OUTPUT SETTINGS]	[AUDIO OUT]	—	✓	✓
	[HDMI OUT CH]	—	✓	✓
[ALARM]	[BATTERY END]	—	✓	✓
	[MEDIA END]	—	✓	✓
	[WARNING]	—	✓	✓

[VIDEO OUT/LCD/VF] menu

Item		SCENE	SETUP	INITIALIZE
[VIDEO OUT SEL]		—	✓	✓
[SDI OUT]	[OUTPUT SW]	—	✓	✓
	[OUT FORMAT]	—	✓	✓
	[3G-SDI OUT]	—	✓	✓
	[SD-SDI EDH]	—	✓	✓
	[SDI REC REMOTE]	—	✓	✓
	[SDI OUT CHAR]	—	✓	✓
	[SDI OUT ZEBRA]	—	✓	✓
	[SDI OUT HDR]	—	✓	✓
	[SDI OUT V-Log]	—	✓	✓
[HDMI OUT]	[OUT FORMAT]	—	✓	✓
	[HDMI TC OUT]	—	✓	✓
	[HDMI REC REMOTE]	—	✓	✓
	[HDMI OUT CHAR]	—	✓	✓
	[HDMI OUT ZEBRA]	—	✓	✓
	[HDMI OUT HDR]	—	✓	✓
	[HDMI OUT V-Log]	—	✓	✓
[AV OUT]	[OUTPUT SW]	—	✓	✓
	[AV OUT CHAR]	—	✓	✓
	[AV OUT ZEBRA]	—	✓	✓
[SD DOWNCON MODE]		—	✓	✓
[LCD]	[BRIGHTNESS]	—	✓	✓
	[COLOR LEVEL]	—	✓	✓

Item		SCENE	SETUP	INITIALIZE
	[CONTRAST]	—	✓	✓
	[BACK LIGHT]	—	✓	✓
	[SELF SHOOT]	—	✓	✓
[VF]	[BRIGHTNESS]	—	✓	✓
	[COLOR LEVEL]	—	✓	✓
	[CONTRAST]	—	✓	✓
	[VF COLOR]	—	✓	✓
	[EYE SENSOR]	—	✓	✓
[LCD/VF HDR]		—	✓	✓
[LCD/VF V-Log]		—	✓	✓
[INDICATOR]	[FULL AUTO]	—	✓	✓
	[SLOT1/2 STATUS]	—	✓	✓
	[2 SLOTS FUNC.]	—	✓	✓
	[STREAMING]	—	✓	✓
	[NETWORK]	—	✓	✓
	[BATTERY REMAIN]	—	✓	✓
	[REC FORMAT]	—	✓	✓
	[FRAME RATE]	—	✓	✓
	[CLIP NAME]	—	✓	✓
	[BONDING DEVICE]	—	✓	✓
	[REC REMOTE]	—	✓	✓
	[REC MODE]	—	✓	✓
	[FBC]	—	✓	✓
	[HDR/DRS/V-Log]	—	✓	✓
	[O.I.S.]	—	✓	✓
	[SCENE FILE]	—	✓	✓
	[AREA/FACE]	—	✓	✓
	[AUDIO LEVEL METER]	—	✓	✓
	[GAIN]	—	✓	✓
	[ND FILTER]	—	✓	✓
	[SHUTTER]	—	✓	✓
	[IRIS]	—	✓	✓
	[ZOOM/FOCUS]	—	✓	✓
	[WHITE BALANCE]	—	✓	✓
	[FACE DETECTION]	—	✓	✓
	[DATE/TIME]	—	✓	✓
	[SHOOTING MODE]	—	✓	✓
	[MULTI MANUAL]	—	✓	✓
	[D.ZOOM]	—	✓	✓
	[IR REC]	—	✓	✓
	[PLAYBACK STATUS]	—	✓	✓
	[SD CARD WARNING]	—	✓	✓
[MARKER]	[CENTER MARKER]	—	✓	✓
	[SAFETY MARKER]	—	✓	✓
	[SAFETY AREA]	—	✓	✓
	[FRAME MARKER]	—	✓	✓
	[FRAME COLOR]	—	✓	✓
[FOCUS ASSIST]	[FOCUS ASSIST SW]	—	✓	✓
	[EXPAND MODE]	—	✓	✓
	[EXPAND VALUE]	—	✓	✓
	[PEAKING LEVEL]	—	✓	✓
	[PEAKING COLOR]	—	✓	✓
	[BLACK & WHITE]	—	✓	✓
	[DETAIL]	—	✓	✓
	[DETAIL LEVEL]	—	✓	✓
	[DETAIL FREQ.]	—	✓	✓
[EI ASSIST]	[ZEBRA]	—	✓	✓
	[ZEBRA1 DETECT]	—	✓	✓
	[ZEBRA2 DETECT]	—	✓	✓
	[ZEBRA2]	—	✓	✓

Item		SCENE	SETUP	INITIALIZE
	[WFM MODE]	—	✓	✓
	[WFM TRANSPARENCE]	—	✓	✓
	[Y GET UNIT]	—	✓	✓
[LEVEL GAUGE]	[LEVEL GAUGE]	—	✓	✓
	[LEVEL GAUGE RESET]	—	—	—

[RECORDING] menu

Item		SCENE	SETUP	INITIALIZE
[FORMAT MEDIA]		—	—	—
[CLIP NAME]	[CAM INDEX]	—	—	✓
	[NEXT CARD COUNT]	—	—	✓
[FILE SPLIT]		—	✓	✓
[2 SLOTS FUNC.]		—	✓	✓
[PRE REC]		—	✓	✓
[PROXY SETTING]	[PROXY REC]	—	✓	✓
	[PROXY V-Log]	—	✓	✓
	[PROXY HDR]	—	✓	✓
[REC FUNCTION]	[REC MODE]	—	✓	✓
	[REC MODE HOLD]	—	✓	✓
	[INTERVAL TIME]	—	✓	✓
[TC/UB]	[TC PRESET]	—	—	—
	[UB PRESET]	—	—	—
	[FREE/REC RUN]	—	✓	✓
	[DF/NDF]	—	✓	✓
	[UB MODE]	—	✓	✓
	[TC IN/OUT SEL]	—	✓	✓
	[TC OUT REF]	—	✓	✓
[REC COUNTER]		—	✓	✓
[TIME STAMP]		—	✓	✓
[REC META DATA]	[LOAD]	—	—	—
	[RECORD]	—	✓	✓
	[USER CLIP NAME]	—	✓	✓
	[CARD SERIAL]	—	✓	✓
	[INITIALIZE]	—	—	—
	[PROPERTY]	—	—	—

[NETWORK] menu

Item			SCENE	SETUP	INITIALIZE
[DEVICE SEL]			—	✓	✓
[NETWORK FUNC]			—	✓	✓
[IP REMOTE]	[ENABLE/DISABLE]		—	✓	✓
	[CX ROP PORT]		—	✓	✓
	[REMOTE CONTROL PORT]		—	✓	✓
	[USER ACCOUNT]		—	—	✓
	[ACCOUNT LIST]		—	—	✓
[UPLOAD]	[ENABLE/DISABLE]		—	✓	✓
	[CONNECTION INFO.]		—	✓	✓
	[DATA TYPE]		—	—	—
	[LOAD (SD CARD)]		—	—	—
	[CLEAR (MEMORY)]		—	—	—
[STREAMING]	[STREAMING PROTOCOL]		—	✓	✓
	[STREAMING FORMAT]		—	✓	✓
	[CONNECTION INFO.]		—	✓	✓
	[DATA TYPE]		—	—	—
	[RTMP(S) RECEIVER URL]		—	✓	✓
	[RTSP SETTING]	[PORT]	—	✓	✓
		[MULTICAST]	—	✓	✓
		[MULTICAST ADDRESS]	—	✓	✓

Item			SCENE	SETUP	INITIALIZE
		[MULTICAST PORT]	—	✓	✓
		[TTL/HOP LIMIT]	—	✓	✓
	[SRT SETTING]	[DEST URL]	—	✓	✓
		[STREAM ID]	—	✓	✓
		[PORT]	—	✓	✓
		[TTL/HOP LIMIT]	—	✓	✓
		[LATENCY]	—	✓	✓
		[ENCRYPTION]	—	—	✓
		[PASSPHRASE]	—	—	✓
	[LOAD (SD CARD)]		—	—	—
	[SAVE (SD CARD)]		—	—	—
	[CLEAR (MEMORY)]		—	—	—
	[START]		—	—	✓
[NDI|HX]	[ACTIVATION]		—	—	—
	[STREAMING FORMAT]		—	✓	✓
	[MULTICAST]		—	✓	✓
	[MULTICAST ADDRESS]		—	✓	✓
	[MULTICAST PORT]		—	✓	✓
	[TTL/HOP LIMIT]		—	✓	✓
	[CLEAR ACTIVATION]		—	—	—
[LAN PROPERTY]	[MAC ADDRESS]		—	—	—
	[IPv4 SETTING]	[DHCP]	—	✓	✓
		[IP ADDRESS]	—	✓	✓
		[SUBNET MASK]	—	✓	✓
		[DEFAULT GATEWAY]	—	✓	✓
		[PRIMARY DNS]	—	✓	✓
		[SECONDARY DNS]	—	✓	✓
	[IPv6 SETTING]	[ENABLE/DISABLE]	—	✓	✓
		[DHCP]	—	✓	✓
		[IP ADDRESS]	—	✓	✓
		[PREFIX LENGTH]	—	✓	✓
		[DEFAULT GATEWAY]	—	✓	✓
		[PRIMARY DNS]	—	✓	✓
		[SECONDARY DNS]	—	✓	✓
[WLAN PROPERTY]	[MAC ADDRESS]		—	—	—
	[TYPE]		—	✓	✓
	[SSID]		—	—	✓
	[BAND]		—	✓	✓
	[CHANNEL(2.4GHz)]		—	✓	✓
	[CHANNEL(5GHz)]		—	✓	✓
	[ENCRYPTION]		—	✓	✓
	[ENCRYPT KEY]		—	—	✓
	[IPv4 SETTING]	[DHCP]	—	✓	✓
		[IP ADDRESS]	—	✓	✓
		[SUBNET MASK]	—	✓	✓
		[DEFAULT GATEWAY]	—	✓	✓
		[PRIMARY DNS]	—	✓	✓
		[SECONDARY DNS]	—	✓	✓
[INFORMATION]	[STATUS]		—	—	—
[UTILITY]	[NETWORK INITIALIZE]		—	—	—
	[NET CHECKER]		—	—	—
	[EASY IP SETTING]		—	—	✓
	[EASY IP CAMERA TITLE]		—	✓	✓

[SYSTEM] menu

Item	SCENE	SETUP	INITIALIZE
[FREQUENCY]	—	✓	✓
[FILE FORMAT]	—	✓	✓
[REC FORMAT]	—	✓	✓

Item	SCENE	SETUP	INITIALIZE
[AUDIO SAMPLE RES.]	—	✓	✓
[ASPECT]	—	✓	✓
[SUPER SLOW]	—	✓	✓
[SHOOTING MODE]	—	✓	✓
[COLOR SETTING]	—	✓	✓

[OTHERS] menu

Item		SCENE	SETUP	INITIALIZE
[FILE]	[SCENE FILE(SD CARD)]	—	—	—
	[SETUP FILE(SD CARD)]	—	—	—
	[SETUP FILE(MEMORY)]	—	—	—
	[SLOT FOR LOAD/SAVE]	—	✓	✓
[COLOR BARS]	[COLOR BARS TYPE]	—	✓	✓
	[TEST TONE]	—	✓	✓
[LED]	[TALLY LED]	—	✓	✓
	[REC TALLY]	—	✓	✓
	[ACCESS LED]	—	✓	✓
[CLOCK]	[CLOCK SETTING]	—	—	—
	[TIME ZONE]	—	—	—
	[DATE FORMAT]	—	✓	✓
[USB DEVICE]	[CARD READER MODE]	—	—	—
	[SERVICE MODE]	—	—	—
[INFORMATION]	[VERSION]	—	—	—
	[OPERATION TIME]	—	—	—
	[UPDATE]	—	—	—
[LANGUAGE]		—	✓	✓
[MENU INITIALIZE]		—	—	—

Handling setting data

Scene files

File structure of the setting data

The scene files of [F1:] to [F6:] can be saved in the camera memory in accordance to the scene file number.

What can be saved as a scene file is the setting contents of the [SCENE FILE] menu.

In addition, the current setting values of the scene files of [F1:] to [F6:] can be saved as a file to the camera memory and the memory card, and that data can be loaded and used in the camera.

Setting data file structure of the camera is as follows.

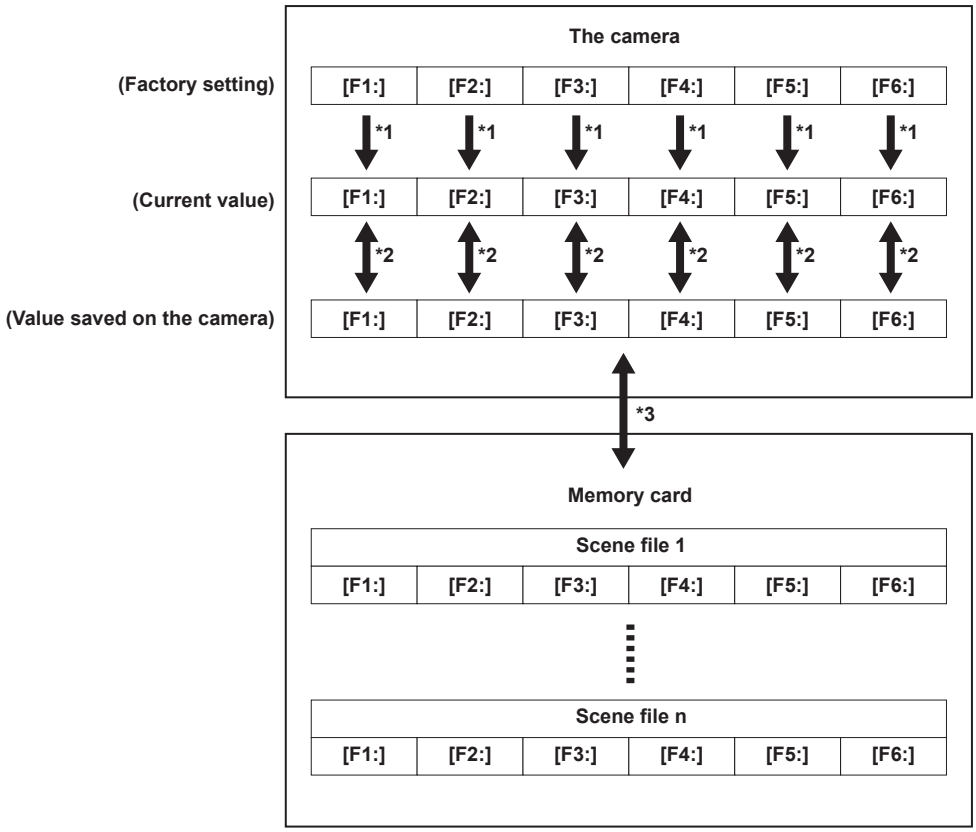

*1 The scene file can be initialized.
Select the [SCENE FILE] menu → [LOAD/SAVE/INITIALIZE] → [INITIALIZE].

*2 Current setting value of each scene file can be individually saved in the camera body. Also, the scene files saved in the camera memory can be loaded.
Select the [SCENE FILE] menu → [LOAD/SAVE/INITIALIZE] → [LOAD]/[SAVE].

*3 The scene file can be saved in a memory card. Also, the scene files saved in the memory card can be loaded.

*4 The card slot to perform loading and saving can be set in the [OTHERS] menu → [FILE] → [SLOT FOR LOAD/SAVE].

Saving the scene file

Saving the scene file into the camera memory

Saves the current setting value of the camera into the camera memory.

1 Select the [SCENE FILE] menu → [LOAD/SAVE/INITIALIZE] → [SAVE].

Saving the scene file to the memory card

The scene file can be overwritten to a file on the memory card, or saved as a new file.

■ **Saving the scene file as a new file to the memory card**

Current setting values of the camera are saved as a new file in a memory card by specifying the file name.

1 Select the [OTHERS] menu → [FILE] → [SCENE FILE(SD CARD)] → [SAVE AS].

The file name entry screen and the keyboard are displayed.

2 Enter the text to set with the keyboard.

3 Select [Enter].

A confirmation screen is displayed.

4 Select [SET].

The file is saved.

- An error message may be displayed. For details about the error message, refer to “Cases indicated by error messages” (page 217).

■ Saving the scene file by overwriting a file on the memory card

Overwrites the file selected in the list of the scene files saved on the memory card with the current setting values of the camera.

1 Select the [OTHERS] menu → [FILE] → [SCENE FILE(SD CARD)] → [SAVE].

The list of scene files saved on the memory card is displayed.

2 Select the file to overwrite from the list of scene files.

The file name entry screen and the keyboard are displayed. Leave it as is when overwriting.

3 Select [Enter].

A confirmation screen is displayed.

4 Select [SET].

The file is saved.

Loading the scene file

Loads a scene file saved in the camera memory or the memory card.

Loading the scene file from the camera memory

1 Select the [SCENE FILE] menu → [LOAD/SAVE/INITIALIZE] → [LOAD].

Loading the scene file from the memory card

1 Select the [OTHERS] menu → [FILE] → [SCENE FILE(SD CARD)] → [LOAD].

The list of scene files stored in the specified folder of the memory card is displayed.

2 Select the file name for the file to load.

3 Selects if all of the scene files ([F1:] to [F6:]) are loaded, or individually loaded.

- To load all, select [ALL].
  To load individually, select the scene number to load.

4 Select [SET].

The file is loaded.

- An error message may be displayed. For details about the error message, refer to “Cases indicated by error messages” (page 217).

Initialization of the scene file

Initializes the scene file saved in the camera memory.

1 Select the scene file to return to the factory setting in the [SCENE FILE] menu → [FILE SELECT].

2 Select the [SCENE FILE] menu → [LOAD/SAVE/INITIALIZE] → [INITIALIZE].

The confirmation screen is displayed.

3 Select [YES].

The selected scene file returns to the factory setting.

Changing the scene file name

Changes the name of the scene file saved in the camera memory.
Only changeable part is the title section of the scene file name. As an example, if the scene file name is [F6:HLG], only the “HLG” part can be changed.

1 Select the scene file to change the name in the [SCENE FILE] menu → [FILE SELECT].

2 Select the [SCENE FILE] menu → [NAME EDIT].

The file name entry screen and the keyboard are displayed.

3 Enter the text to set with the keyboard. (Maximum eight characters)

4 Select [Enter].

The file name is updated.

Setup file

The menu that is specified can be saved to the camera memory or the memory card, or loaded to the camera from the memory card.
The card slot to perform loading and saving can be set in the [OTHERS] menu → [FILE] → [SLOT FOR LOAD/SAVE].

Saving the setup file

The setup file can be overwritten to a file on the camera memory or memory card, or saved as a new file.

Saving the setup file as a new file to the memory card

Current setting values of the camera are saved as a new file in a memory card by specifying the file name.

1 Select the [OTHERS] menu → [FILE] → [SETUP FILE(SD CARD)] → [SAVE AS].

The file name entry screen and the keyboard are displayed.

2 Enter the text to set with the keyboard.

3 Select [Enter].

A confirmation screen is displayed.

4 Select [SET].

The file is saved.

- An error message may be displayed. For details about the error message, refer to “Cases indicated by error messages” (page 217).

Saving the setup file by overwriting a file on the memory card

Overwrites the file selected in the list of the setup files saved on the memory card with the current setting values of the camera.

1 Select the [OTHERS] menu → [FILE] → [SETUP FILE(SD CARD)] → [SAVE].

The list of setup files saved on the memory card is displayed.

2 Select the file to overwrite from the list of setup files.

The file name entry screen and the keyboard are displayed. Leave it as is when overwriting.

3 Select [Enter].

A confirmation screen is displayed.

4 Select [SET].

The file is saved.

Saving the setup file to the camera memory

Saves the current setting value of the camera into the camera memory.

1 Select the [OTHERS] menu → [FILE] → [SETUP FILE(MEMORY)] → [SAVE].

Loading the setup file

Loading setup files from the memory card

Loads a setup file saved in the memory card.

1 Select the [OTHERS] menu → [FILE] → [SETUP FILE(SD CARD)] → [LOAD].

A list of setup files stored in the specified folder in the memory card is displayed.

2 Select the file name for the file to load.

3 Select [SET].

Loading of the file is started. The camera is restarted after loading.

- An error message may be displayed. For details about the error message, refer to “Cases indicated by error messages” (page 217).
- The file saved by a camera with different firmware version may not be able to load.

Loading setup files from the camera memory

Loads the setup file saved on the camera memory.

1 Select the [OTHERS] menu → [FILE] → [SETUP FILE(MEMORY)] → [LOAD].

Loading of the file is started. The camera is restarted after loading.

Chapter 5 Shooting

This chapter describes the basic procedure for recording. This chapter also describes the special recording method.

Shooting

For shooting, use the following steps.

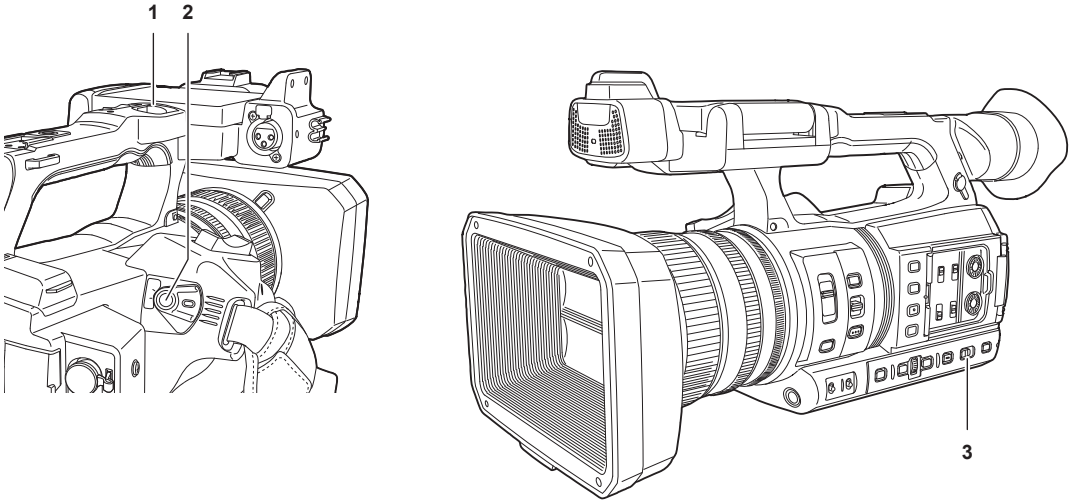

1 **REC button (on the handle)**

2 **REC button (on the grip)**

3 **<AUTO/MANUAL> switch**

1 Set the video settings and the audio input.

- Before shooting, the followings must be set or adjusted.
  - Image settings for the brightness function (iris, gain, shutter) and the white balance adjustment function, etc.
  - Audio input settings for audio recording.
  - Adjusting audio recording level

2 Select shooting mode with the <AUTO/MANUAL> switch.

<AUTO>: auto mode

- [A] is displayed at the upper part of the viewfinder and LCD monitor.
- Focus, iris, gain, shutter, and white balance are automatically adjusted.
- You can set the operations specified for the auto mode in the [CAMERA] menu → [AUTO SW].

<MANUAL>: manual mode

- To adjust focus, iris, gain, shutter speed, and white balance manually, set the camera to manual mode.
- To adjust the brightness, adjust the iris and ND filter. (page 126)
- To focus manually, use the focus operation. (page 126)
- To adjust the white balance, adjust the white balance and black balance. (page 128)
- To adjust the setting of the audio input and the recording level, switch audio input. (page 138)

3 Start the recording by pressing the REC button.

- One REC button is located on both the handle and the grip.
- The tally lamp is illuminated in red while recording.

4 Press the REC button again to stop.

After pressing the REC button, some time may be required until the recording stops.

5 Check videos recorded.

After recording ends, pressing the <REC CHECK> button automatically plays back approximately the last three seconds of the last recorded clip. In this way, you can check whether video has been recorded properly.

- Returns to recording standby after checking.

REC check will not operate in following cases.

- When the power is turned ON/OFF
- When restarted
- When the <THUMBNAIL> button is pressed
- When the memory card is inserted/ejected
- When formatted the memory card
- When the card slot to record is switched by pressing the USER button to which [SLOT SEL] is assigned or by touching the USER button icon
- When switched to [CARD READER MODE] or [SERVICE MODE]
- When the [RECORDING] menu → [2 SLOTS FUNC.] → [SIMUL REC]/[BACKGR REC] is set
- When either of the following settings are changed
  - [SYSTEM] menu → [FREQUENCY]
  - [SYSTEM] menu → [FILE FORMAT]
  - [SYSTEM] menu → [REC FORMAT]
  - [RECORDING] menu → [2 SLOTS FUNC.]

Selecting the resolution, codec, and frame rate for recording video

The resolution, codec, and frame rate of the recording video can be selected.

- [SYSTEM] menu → [FREQUENCY]: System frequency
- [SYSTEM] menu → [FILE FORMAT]: File format for recording
- [SYSTEM] menu → [ASPECT]: Aspect ratio of the video to record in the signal format of the SD resolution (480i and 576i)
- [SYSTEM] menu → [SUPER SLOW]: Super slow recording settings
- [SYSTEM] menu → [SHOOTING MODE]: Shooting mode settings according to the shooting environment
- [REC FORMAT]: Sets the signal format and codec mode for recording.
- [SYSTEM] menu → [AUDIO SAMPLE RES.]: Number of bits of the audio to record (selectable if set to AVC-I100/AVC-I50)
- [SCENE FILE] menu → [VFR]: Variable frame rate recording function (variable frame rate range)

When [FILE FORMAT] is set to [P2]

■ Video

Resolution	[FREQUENCY]	[REC FORMAT]	VFR
1920×1080	[59.94Hz]	[1080-59.94p/AVC-I100] [1080-59.94p/AVC-I422] [1080-59.94p/AVC-G25] [1080-59.94p/AVC-G12] [1080-59.94i/AVC-I200] [1080-59.94i/AVC-I100] [1080-59.94i/AVC-I50] [1080-59.94i/AVC-G50] [1080-59.94i/AVC-G25] [1080-59.94i/AVC-G12]	—
	[50.00Hz]	[1080-50.00p/AVC-I100] [1080-50.00p/AVC-I422] [1080-50.00p/AVC-G25] [1080-50.00p/AVC-G12] [1080-50.00i/AVC-I200] [1080-50.00i/AVC-I100] [1080-50.00i/AVC-I50] [1080-50.00i/AVC-G50] [1080-50.00i/AVC-G25] [1080-50.00i/AVC-G12]	
1280×720	[59.94Hz]	[720-59.94p/AVC-I200] [720-59.94p/AVC-I100] [720-59.94p/AVC-I50] [720-59.94p/AVC-G50] [720-59.94p/AVC-G25] [720-59.94p/AVC-G12]	
	[50.00Hz]	[720-50.00p/AVC-I200] [720-50.00p/AVC-I100] [720-50.00p/AVC-I50] [720-50.00p/AVC-G50] [720-50.00p/AVC-G25] [720-50.00p/AVC-G12]	

■ Audio

Codec	Number of channels	Number of quantizing bits	Sampling frequency
LPCM	4ch	24 bits (anything other than AVC-G12) 16 bits (AVC-I100/AVC-I50/AVC-G12)	48 kHz

When [FILE FORMAT] is set to [MOV]

■ Video

Resolution	[FREQUENCY]	[REC FORMAT]	VFR*
3840×2160	[59.94Hz]	[2160-59.94p/420LongGOP 150M] [2160-59.94p/HEVC LongGOP 200M] [2160-59.94p/HEVC LongGOP 100M] [2160-29.97p/420LongGOP 100M] [2160-23.98p/420LongGOP 100M] [2160-29.97p/HEVC LongGOP 150M] [2160-23.98p/HEVC LongGOP 150M]	1fps to 60fps
		[2160-29.97p/422LongGOP 150M] [2160-29.97p/422ALL-I 400M] [2160-23.98p/422LongGOP 150M] [2160-23.98p/422ALL-I 400M]	1fps to 30fps
	[50.00Hz]	[2160-50.00p/420LongGOP 150M] [2160-50.00p/HEVC LongGOP 200M] [2160-50.00p/HEVC LongGOP 100M] [2160-25.00p/420LongGOP 100M] [2160-25.00p/HEVC LongGOP 150M]	1fps to 50fps
		[2160-25.00p/422LongGOP 150M] [2160-25.00p/422ALL-I 400M]	1fps to 25fps
1920×1080	[59.94Hz]	[1080-59.94p/422LongGOP 100M] [1080-59.94p/422ALL-I 200M] [1080-29.97p/422LongGOP 50M] [1080-29.97p/422ALL-I 100M] [1080-23.98p/422LongGOP 50M] [1080-23.98p/422ALL-I 100M]	1fps to 60fps, 120fps (during super slow recording)
		[1080-59.94i/422LongGOP 50M] [1080-59.94i/422ALL-I 100M]	—
	[50.00Hz]	[1080-50.00p/422LongGOP 100M] [1080-50.00p/422ALL-I 200M] [1080-25.00p/422LongGOP 50M] [1080-25.00p/422ALL-I 100M]	1fps to 50fps, 100fps (during super slow recording)
		[1080-50.00i/422LongGOP 50M] [1080-50.00i/422ALL-I 100M]	—

* For the range of the frame rate that can be set, refer to “[FRAME RATE]” (page 70).

■ Audio

Codec	Number of channels	Number of quantizing bits	Sampling frequency
LPCM	4ch	24 bits	48 kHz

When [FILE FORMAT] is set to [AVCHD]

■ Video

Resolution	[FREQUENCY]	[REC FORMAT]	VFR
1920×1080	[59.94Hz]	[1080-59.94p/AVCHD PS] [1080-59.94i/AVCHD PH] [1080-59.94i/AVCHD HA]	—
		[1080-23.98p/AVCHD PH]	—
	[50.00Hz]	[1080-50.00p/AVCHD PS] [1080-50.00i/AVCHD PH] [1080-50.00i/AVCHD HA]	—
1280×720	[59.94Hz]	[720-59.94p/AVCHD PM]	—
	[50.00Hz]	[720-50.00p/AVCHD PM]	—
720×480	[59.94Hz]	[480-59.94i/AVCHD SA]	—
720×576	[50.00Hz]	[576-50.00i/AVCHD SA]	—

■ Audio

Codec	Number of channels	Number of quantizing bits	Sampling frequency
Dolby Audio™	2ch	16 bits	48 kHz

Adjustable settings when shooting

Adjust the iris and gain when shooting.

Iris

1 Switch to manual mode with the <AUTO/MANUAL> switch. (page 123)

2 Press the <IRIS> button to switch the adjustment method for the lens aperture.

Auto iris: Adjusts the iris setting automatically.
Manual iris: Adjust the lens iris manually.

3 When on manual iris, rotate the iris ring to adjust the lens iris.

When the auto iris level function for auto iris is enabled, the target value of the auto iris level can be adjusted by turning the iris ring. However, the value is not applied to the setting in the [SCENE FILE] menu → [A.IRIS LEVEL EFFECT].

Gain

If the camera screen is dark, increase the gain to brighten the screen.

1 Switch to manual mode with the <AUTO/MANUAL> switch. (page 123)

2 Switch gain with the <GAIN> switch.

<L>: Normally set to this position. (Factory setting is [0dB] or [ISO 800])
<M>: Increases the gain of the camera image amp. (Factory setting is [6dB] or [ISO 1600])
<H>: Increases the gain of the camera image amp. (Factory setting is [12dB] or [ISO 3200])
The gain values for <L>, <M>, and <H> can be changed in the [CAMERA] menu → [SW MODE] → [LOW GAIN], [MID GAIN], and [HIGH GAIN]. (page 66)
Unit of the gain value can be changed in the [CAMERA] menu → [SW MODE] → [GAIN/ISO MODE].
The setting is fixed to [dB] when the [SYSTEM] menu → [COLOR SETTING] is set to [NORMAL].
When in auto mode, selecting the [CAMERA] menu → [AUTO SW] → [AGC] → [ON] will set the camera to auto gain regardless of the position of the <GAIN> switch. (page 69)

Super gain

When shooting in dark locations, you can set super gain regardless of whether the camera is in auto mode or manual mode.

Select either [24dB], [30dB], [36dB], or [ALL] in the [CAMERA] menu → [SW MODE] → [SUPER GAIN].

Press the USER button to which [SUPER GAIN] is assigned or touch the USER button icon to toggle the gain that is selected. (page 51)

Toggles [24dB], [30dB], [36dB], and the normal gain in order each time the USER button is pressed or the USER button icon is touched when set to [ALL].

NOTE

- Super gain does not operate when the [CAMERA] menu → [SW MODE] → [GAIN/ISO MODE] is set to [ISO].

Brightness adjustment

When the external light is strong, you can switch the ND filter (brightness adjustment filter) to use with the <ND FILTER> switch.

1 Change the setting of the <ND FILTER> switch.

<1/64>: Reduces the amount of light entering the MOS sensor to 1/64.
<1/16>: Reduces the amount of light entering the MOS sensor to 1/16.
<1/4>: Reduces the amount of light entering the MOS sensor to 1/4.
<CLR>: Does not use the ND filter.

Macro

Macro function can be switched [ON]/[OFF].

1 Press the USER button to which [MACRO] is assigned or touch the USER button icon.

- When [ON] is set, is displayed at the top of the focus display on the viewfinder or LCD monitor.

NOTE

- This can also be set with the [CAMERA] menu → [SW MODE] → [FOCUS MACRO].

Focusing (manual focus)

1 Switch the method of controlling the focus with the <FOCUS> switch.

<A>: Changes to the auto focus mode. The auto focus mode adjusts the focus automatically.
<M>: Changes to the manual focus mode. Control the focus ring manually to adjust the focus.
<∞>: Changes to the manual focus mode after the focus distance is set to infinity.
This switch is the spring switch. Even when the <FOCUS> switch is pushed towards the <∞> side, the switch returns to the <M> position.

NOTE

- Since the auto focus control may not operate properly if there is a flicker, select a shutter speed that is appropriate to the light.

- If you set the camera to auto focus mode at times other than 60i (50i) and 60P (50P), the time required for the focus control will be slightly longer than when in normal focus mode.
- When the [CAMERA] menu → [AUTO SW] → [AF] → [ON] is selected while the camera is in auto mode, auto focusing is performed regardless of the position of the <FOCUS> switch.

Auto focusing

Performs automatic focusing while the <PUSH AUTO> button is pressed during manual focus mode.

Manual focus assist mode

You can switch from the manual focus mode to the manual focus assist mode by setting the [CAMERA] menu → [SW MODE] → [MF ASSIST] → [ON].

- Compared to the manual focus mode, you can adjust the focus (course adjustment) by rotating the focus ring approximately a half-turn.
- After adjusting with the focus ring, the focus is automatically adjusted (fine adjustment).
- When the focus deviation is great, it may not be in focus.
- After executing auto adjustment, it will not adjust automatically until you move the focus ring again.

Area mode function

Touch the subject to apply various effects tailored to the subject that is touched.

- Area auto focus function
  Adjusts the focus automatically tailored to the subject that is touched.
- Area auto iris level function
  Adjusts the iris automatically tailored to the subject that is touched.
- Area brightness display
  Displays the luminance level of the subject that is touched.

Operation function settings

Sets the operation to be assigned to the area mode function from the [CAMERA] menu.

1 Select the desired function in the [CAMERA] menu → [SW MODE] → [AREA MODE].

- **[INHIBIT]:** Does not assign a function.
- **[FOCUS]:** Sets the area focus function
- **[IRIS]:** Area iris function
- **[Y GET]:** Area brightness display
- **[FOCUS/IRIS]:** Simultaneous operation of the area focus function and area iris function
- **[FOCUS/Y GET]:** Simultaneous operation of the area focus function and area brightness display

Operation of area mode function

The function set in the [CAMERA] menu → [SW MODE] → [AREA MODE] can be used by performing the following operation when shooting or while in shooting standby.

1 Press the USER button to which the function set in the [CAMERA] menu → [SW MODE] → [AREA MODE] is assigned or touch the USER button icon.

- The area frame is displayed, and the AREA is displayed on the right side of the screen.
- When the area brightness display is activated, the brightness display in the center does not operate.

2 Touch the shooting screen.

- The area frame is displayed in the area that is touched to apply the effects set in the menu.

3 Press the USER button or the USER button icon again.

- The area frame disappears and the camera exits the area mode function.

NOTE

- The area mode function is cancelled when the power is turned off or when the thumbnail screen is displayed.

Adjusting the white and black balance

To obtain high-quality video at all times using the camera, the white and black balance must be adjusted according to conditions.
Adjust the AWB (white balance adjustment), ABB (black balance adjustment), and AWB (white balance adjustment) in order to obtain higher image quality.

White balance adjustment

The white balance must be adjusted again when the lighting conditions change. Follow the steps below to adjust the white balance automatically.

■ When storing in <A> of the <WHITE BAL> switch

1 Switch to manual mode with the <AUTO/MANUAL> switch. (page 123)

2 Set the <GAIN> switch.

Normally, set this to [0dB] or [ISO 800]. If it is too dark, set the gain to an appropriate value.

3 Set the <WHITE BAL> switch to <A>.

4 Change the <ND FILTER> switch settings according to the light conditions.

For setting examples for the <ND FILTER> switch, refer to “Brightness adjustment” (page 126).

5 Place the white pattern at a point where the light conditions match those for the light source for the subject, and zoom in on the white pattern so that the white color appears in the screen.

6 Adjust the lens aperture.

Adjust the iris so that the brightness of Y GET is approx. 70%.

7 Press the <AWB> button.

White balance is automatically adjusted.

■ White pattern

- A white object (cloth or wall) near the subject may also be used for the white pattern.
- Required size of white pattern is as follows.

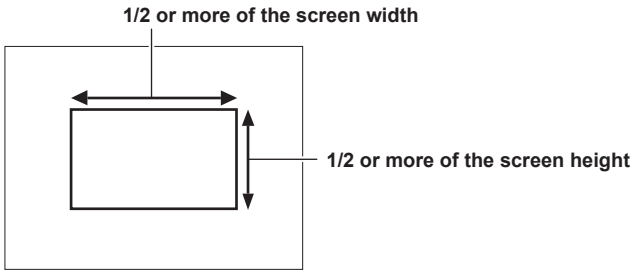

- Keep bright spotlights out of the screen.
- The white pattern must be placed at the center of the screen.

■ Messages displayed in the viewfinder and LCD monitor

- When the auto tracking white balance (ATW) function is operating, white balance cannot be adjusted.

Status	Message	Remark
During adjustment	[AWB A ACTIVE]	
Adjustment completed	[AWB A OK 3200K]	• The adjusted value is automatically stored in the specified memory (A or B).
When the color temperature of the subject is lower than 2000 K or higher than 15000 K	[AWB NG <COLOR TEMP LOW>] [AWB NG <COLOR TEMP HIGH>]	• [AWB NG <COLOR TEMP LOW>] indicates that the temperature is lower than the displayed temperature. [AWB NG <COLOR TEMP HIGH>] indicates that the temperature is higher than the displayed color temperature.

■ [COLOR TEMP Ach SETTING]/[COLOR TEMP Bch SETTING] setting

- The color hue can be changed after the white balance has been adjusted automatically, after setting each item in the [SCENE FILE] menu → [COLOR TEMP Ach SETTING]/[COLOR TEMP Bch SETTING].
- Adjusting either one of [COLOR TEMP], [R GAIN], [B GAIN], and [G AXIS] changes the other three values.
- Performing the automatic white balance again resets [COLOR TEMP], [R GAIN], [B GAIN], and [G AXIS].

When having no time to adjust the white balance

Set the <WHITE BAL> switch to <PRST>.

- [3200K], [5600K], and the values set in the [CAMERA] menu → [SW MODE] → [W.BAL VAR] toggle in order each time the <AWB> button is pressed.

When [VAR] is selected, turning the multidial can set any white balance value between [2000K] and [15000K].

- The value displayed as [VAR] is not always assured. Use it as a reference value.

When the white balance has not been automatically adjusted

When the white balance has not been successfully adjusted, an error message is displayed on the viewfinder screen and LCD monitor displays.

Error message	Meaning	Remedy
[AWB NG <LOW LIGHT>]	There is insufficient light.	Increase the amount of light or increase gain.
[AWB NG <LEVEL OVER>]	There is too much light.	Decrease the amount of light or decrease gain.
[AWB NG <COLOR TEMP LOW>] or [AWB NG <COLOR TEMP HIGH>]	The color temperature is too high, or too low.	Use the appropriate filter or light source.

Manual setting of color temperature

The color temperature of white balance can be adjusted by the setting menu.

1 Press the <AWB> button to select the [W.BAL VAR] mode.

2 In the [CAMERA] menu → [SW MODE] → [W.BAL VAR], set the color temperature.

This can be set from [2000K] to [15000K].

NOTE

- The color temperature can also be operated by the multidial button. For details, refer to “Setting the variable value for the white balance” (page 157).

Viewfinder and LCD monitor screen displays relating to white balance

For details, refer to “Screen status display” (page 175).

Settings of the auto tracking white balance (ATW) function

The camera is equipped with the Auto Tracking White Balance (ATW) function that automatically tracks the white balance of images according to the lighting conditions.

The auto tracking white balance function can be assigned to <A>, <B>, and <PRST> of the <WHITE BAL> switch. Set the function with the [CAMERA] menu → [SW MODE] → [ATW].

Note that if the auto tracking white balance function is assigned to the USER button, the function follows the operation of the USER button.

For details, refer to “Assigning function to the USER buttons” (page 51).

Canceling the auto tracking white balance

Press again the USER button to which the auto tracking white balance function is assigned, touch the USER button icon again, or change the position of the <WHITE BAL> switch. Note that if the auto tracking white balance function is set to the <WHITE BAL> switch, the function cannot be canceled with the USER button.

NOTE

- This function does not guarantee 100% accuracy for the white balance. Note that the tracking performance relative to changes in ambient lighting and white balance performance has been given a certain degree of latitude.

Black balance adjustment

Black balance must be adjusted in the following instances:

- When the camera is used for the first time
- When used after a long period of time without use
- When the ambient temperature has changed considerably
- When super gain is set with the USER button
- When changing the gain switch values
- When toggling items in the [SYSTEM] menu → [REC FORMAT].

To shoot optimum video, we recommend adjusting the black balance immediately before shooting.

Before adjusting the black balance, prepare the conditions for adjusting the white balance.

1 Switch to manual mode with the <AUTO/MANUAL> switch. (page 123)

2 Set the <WHITE BAL> switch to <A> or <B>.

3 Press and hold the <AWB> button for approximately two seconds.

Black balance is adjusted after the white balance.

■ Messages displayed in the viewfinder and LCD monitor

Status	Message	Remark
During adjustment	[ABB ACTIVE]	—
Adjustment completed	[ABB OK]	• The adjusted value is automatically stored in memory.

NOTE

- During black balance adjustment, the aperture is set to automatically shut out light.
- During recording, black balance cannot be adjusted.
- Video is not recorded to the memory card even if the REC button is pressed while executing the automatic black balance.

- The gain switching circuit is automatically switched during black balance adjustment. Flicker or noise sometimes appears on the viewfinder screen and LCD monitor. This is not a malfunction.

Black balance memory

Values stored to memory are saved even if the camera is turned off.

Using the zoom function

Adjust the angle of view you want to shoot.

The camera has a 20x optical zoom.

This can be expanded up to approximately 32 times (approximately 24 times in UHD recording) when the [CAMERA] menu → [SW MODE] → [i.ZOOM] → [ON] is set.

The zoom ratio can be confirmed between [Z000]/[iZ000] (maximum wide angle) to [Z999]/[iZ999] (maximum telephoto) on the screen display. The value becomes higher as the the camera zooms in and smaller as the camera zooms out.

The zoom ratio is displayed as [iZ000] to [iZ999] when [i.ZOOM] is set to [ON]. Background of the character “i” is displayed in white when the i.ZOOM function is enabled.

The zoom can be operated at the following three locations:

- Zoom lever (on the grip)
- Zoom lever (on the handle)
- Zoom ring on the lens

Adjusting the zoom position

Adjust the zoom with the zoom lever.

<T>: Zoom in the image.

<W>: Zoom out the image.

Lightly pressing the zoom lever on the grip will operate the zoom at low speed. Pressing strongly will operate the zoom at high speed.

You can also operate the zoom manually with the zoom ring.

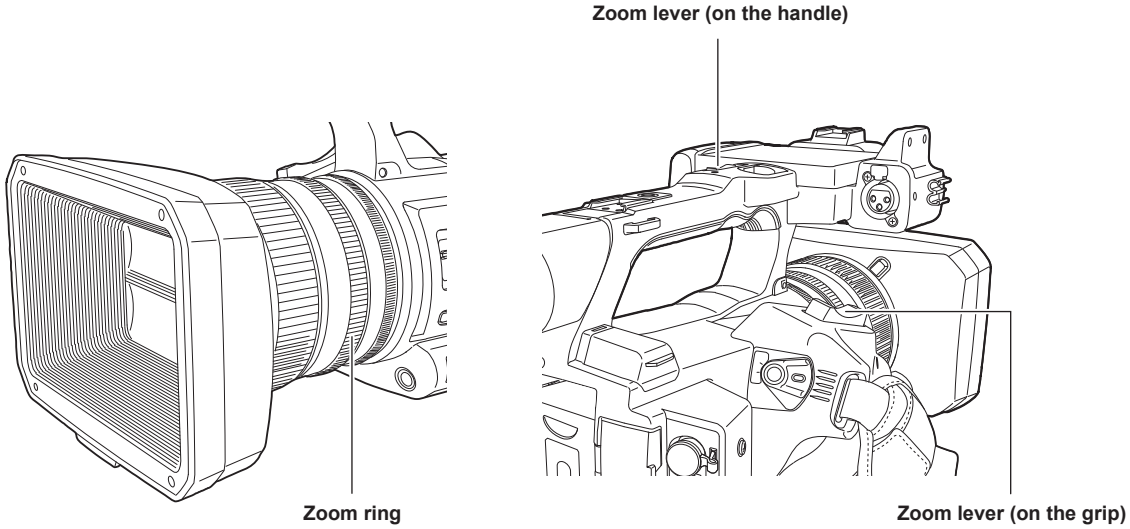

NOTE

- Press the USER button to which [FAST ZOOM] is assigned in the [CAMERA] menu → [USER SW] or touch the USER button icon to enable/disable [FAST ZOOM] when you want to operate the zoom at a higher speed.
- When [FAST ZOOM] is enabled, the motorized zoom can operated with higher speed if the zoom lever is pushed to the end. However, the zoom sound becomes louder than usual. Disable [FAST ZOOM] if the sound of the motorized zoom is obtrusive.

■ Using the zoom lever on the handle

Performs the zoom operation with the speed set in the [CAMERA] menu → [SW MODE] → [H.ZOOM SPEED].

Image quality adjustment

The image quality of the video to record can be set in the [SCENE FILE] menu. Measurement equipment such as a vector scope is necessary to change “Advanced settings”.

Detail function

This function thickens or weakens the outlines of images. It effectively softens or sharpens images, but in some cases, the whole image may become rough due to emphasized noise and edges. To avoid such problems, it is necessary not to add this effect on parts where emphasizing is not needed and keep the details of the parts.

■ General settings

[MASTER DTL]: Sets the level of the detail effect as a whole.

[DTL CORING]: Sets the level of signal (including noise) so that the detail effect does not activate.

■ Advanced settings

Set with the [SCENE FILE] menu → [DETAIL SETTING].

[DETAIL]: Sets [ON]/[OFF] of the detail function.

[V.DTL LEVEL]: Sets the intensity of the detail level in the vertical direction.

[DTL FREQ.]: Sets the thickness of the detail.

[LEVEL DEPEND.]: Compresses details in the darker areas when the detail of luminosity signal is emphasized. Details of bright areas are also compressed more when the value set for [LEVEL DEPEND.] is larger.

[KNEE APE LVL]: Sets the detail level of high luminosity areas (high-brightness areas).

[DTL GAIN(+)]: Sets the detail level of the + direction (to make brighter).

[DTL GAIN(–)]: Sets the detail level of – direction (to make darker).

NOTE

- Detail function cannot be set when the [SYSTEM] menu → [COLOR SETTING] is set to [V-Log].

Skin tone function

This function makes human skin look smoother in images.

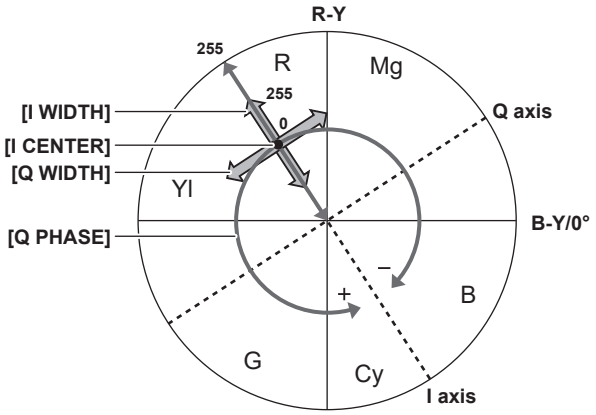

Fig. 1

■ General settings

[SKIN TONE DTL A]/[SKIN TONE DTL B]/[SKIN TONE DTL C]: Selects the skin color where the skin tone detail function should operate from three types of data: [SKIN TONE DTL A]/[SKIN TONE DTL B]/[SKIN TONE DTL C]. [SKIN TONE DTL A]/[SKIN TONE DTL B]/[SKIN TONE DTL C] can be set independently or in combination.

[SKIN TONE ZEBRA]: Displays the zebra pattern in the selected skin color field when [SKIN TONE DTL A]/[SKIN TONE DTL B]/[SKIN TONE DTL C] are enabled. The zebra pattern displays the area selected in [SKIN TONE DTL SETTING].

■ Advanced settings

Set with the [SCENE FILE] menu → [SKIN TONE DTL SETTING].

[DETECT TABLE]: Selects the skin color table of the object on which the skin tone table is applied.

[SKIN DTL EFFECT]: Sets the effect level of the skin tone detail.

- The color composition of video signal (R/G/B) can be converted to color difference signal (R-Y/B-Y) as in (Fig. 1). Within those ranges, set the area on which the following skin tone is applied, using the axis across red and cyan (I axis) and the axis across green and magenta (Q axis).

  [I CENTER]: Sets the center position on the I axis (the area where the skin tone applied).

  [I WIDTH]: Sets the area width where the skin tone is applied, along the I axis with [I CENTER] in the center.

  [Q WIDTH]: Sets the area width where the skin tone is applied, along the Q axis with [I CENTER] in the center.

  [Q PHASE]: Sets the phase where the skin tone is applied, with the Q axis being the reference.

NOTE

- Skin tone function cannot be set when the [SYSTEM] menu → [COLOR SETTING] is set to [V-Log].

RB gain control function

This function makes settings to add or reduce the intensity of red and blue colors according to the position of the <WHITE BAL> switch.

The function works when the switch is at the <PRST> position or when automatic white balance is active. It does not work when auto tracking white balance is activated.

■ General settings

Use the camera with the factory settings.

■ Advanced settings

Set with the [SCENE FILE] menu → [RB GAIN CONTROL SETTING].

- When the <WHITE BAL> switch is at the <PRST> position
  [R GAIN AWB PRE]: Sets to add or reduce the intensity of the red color.
  [B GAIN AWB PRE]: Sets to add or reduce the intensity of the blue color.
- When the <WHITE BAL> switch is at the <A> position
  [R GAIN AWB A]: Sets to add or reduce the intensity of the red color.
  [B GAIN AWB A]: Sets to add or reduce the intensity of the blue color.
- When the <WHITE BAL> switch is at the <B> position
  [R GAIN AWB B]: Sets to add or reduce the intensity of the red color.
  [B GAIN AWB B]: Sets to add or reduce intensity of the blue color.
- When performing automatic white balance by setting the <WHITE BAL> switch to the <A> position
  [AWB A GAIN OFFSET]: Sets whether to keep or reset the values set for [R GAIN AWB A] and [B GAIN AWB A].
- When performing automatic white balance by setting the <WHITE BAL> switch to the <B> position
  [AWB B GAIN OFFSET]: Sets whether to keep the values set for [R GAIN AWB B] and [B GAIN AWB B] or reset them.

Chroma setting function

This function sets color saturation and phase. It applies effects on whole images. It cannot be set to individual color hue.

■ General settings

[CHROMA LEVEL]: Sets the chroma level of the P_R signal and P_B signal. When the vector scope is used, the distance from the center (no color) is increased or decreased for the entire image.

[CHROMA PHASE]: Finely adjusts the chroma phase of the P_R signal and P_B signal. When the vector scope is used, the whole image rotates clockwise or counter-clockwise.

■ Advanced settings

No setting items are provided.

NOTE

- [CHROMA LEVEL] and [CHROMA PHASE] cannot be set when the [SYSTEM] menu → [COLOR SETTING] is set to [V-Log].

Matrix function

This function sets the image color representation by selecting the matrix table. If the settings are changed, the representation of all the colors in the image will also be changed.

The change in color against each axis of matrix is as following figure.

- The bold line in the figure is the reference line for each axis of matrix. The color above the bold line does not change.

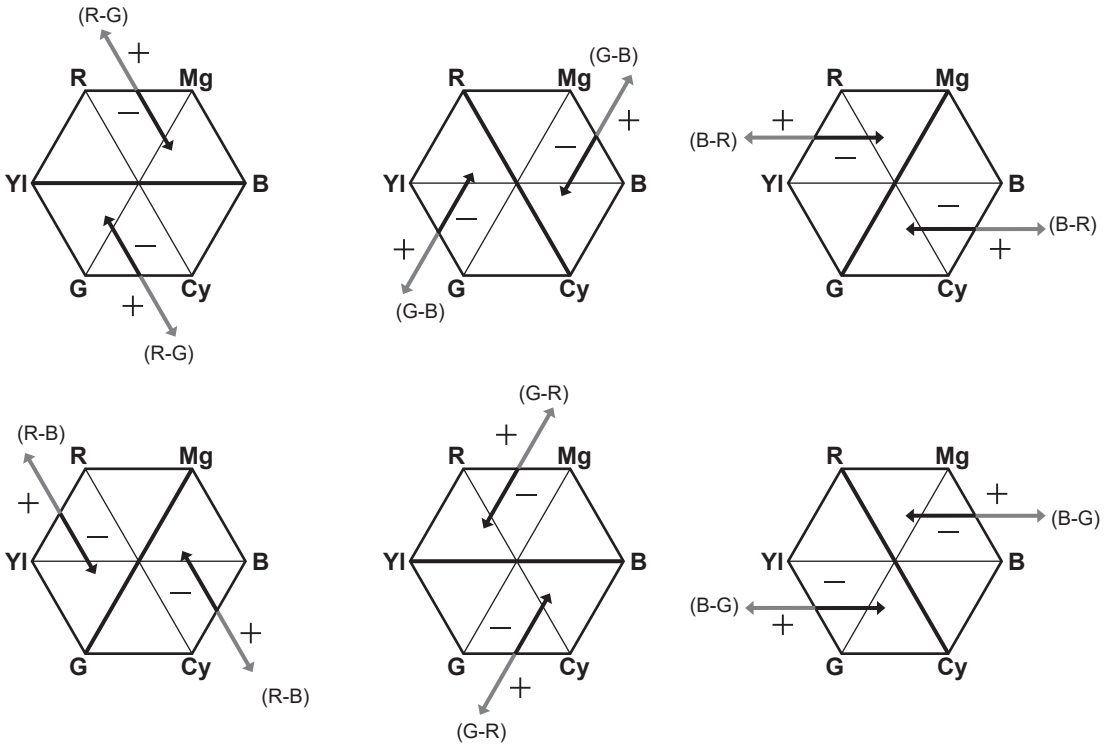

■ General settings

[MATRIX TYPE]: Selects the matrix table to represent the color for shooting.

■ Advanced settings

Set with the [SCENE FILE] menu → [MATRIX SETTING].

Performs fine adjustment relatively on the matrix table selected in [MATRIX TYPE].

Since the fine adjustment is performed relatively, if the matrix table selected in [MATRIX TYPE] differs, the color representation may differ even when the same value is set.

[ADAPTIVE MATRIX]: Controls the color collapse under intense blue light source.

NOTE

- Matrix function cannot be set when the [SYSTEM] menu → [COLOR SETTING] is set to [V-Log].

Color correction function

This function sets color saturation and phase. These settings affect each of the 16 phases of the video individually. It can be set to individual color hue.

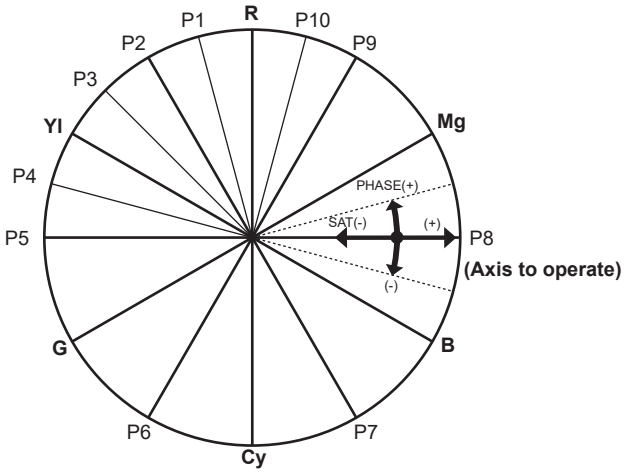

R: Red
P1: (Yl-R)-R
P2: (Yl-R)
P3: Yl-(Yl-R)
Yl: Yellow
P4: (G-Yl)-Yl
P5: (G-Yl)
G: Green
P6: (Cy-G)
Cy: Cyan
P7: (B-Cy)
B: Blue
P8: (Mg-B)
Mg: Magenta
P9: (R-Mg)
P10: R-(R-Mg)

■ General settings

Use the camera with the factory settings.

■ Advanced settings

[R] ([PHASE])/[R-R-Mg] ([PHASE])/[R-Mg] ([PHASE])/[Mg] ([PHASE])/[Mg-B] ([PHASE])/[B] ([PHASE])/[B-Cy] ([PHASE])/[Cy] ([PHASE])/[Cy-G] ([PHASE])/[G] ([PHASE])/[G-Yl] ([PHASE])/[G-Yl-Yl] ([PHASE])/[Yl] ([PHASE])/[Yl-Yl-R] ([PHASE])/[Yl-R] ([PHASE])/[Yl-R-R] ([PHASE]): Changes the phases. + rotates clockwise and – rotates counter-clockwise.

[R] ([SAT])/[R-R-Mg] ([SAT])/[R-Mg] ([SAT])/[Mg] ([SAT])/[Mg-B] ([SAT])/[B] ([SAT])/[B-Cy] ([SAT])/[Cy] ([SAT])/[Cy-G] ([SAT])/[G] ([SAT])/[G-Yl] ([SAT])/[G-Yl-Yl] ([SAT])/[Yl] ([SAT])/[Yl-Yl-R] ([SAT])/[Yl-R] ([SAT])/[Yl-R-R] ([SAT]): Changes the saturation.

NOTE

- Color correction function cannot be set when the [SYSTEM] menu → [COLOR SETTING] is set to [V-Log].

Black control function

This function sets the black level that is to be the reference of luminance.

■ General settings

[MASTER PED]: Sets the reference black level. RGB also changes by changing this setting. – makes the black color darker, and + makes it less dark.

■ Advanced settings

Set with the [SCENE FILE] menu → [RGB BLACK CONTROL SETTING].

[R PED]: Sets the pedestal level of Rch.

[G PED]: Sets the pedestal level of Gch.

[B PED]: Sets the pedestal level of Bch.

[PEDESTAL OFFSET]: Sets whether to keep the values set for each item of [R PED], [G PED], and [B PED] or reset them when automatic black balance adjustment is performed.

NOTE

- Black control function cannot be set when the [SYSTEM] menu → [COLOR SETTING] is set to [V-Log].

Gamma function

This function optimizes the tone of images.

■ General settings

[GAMMA MODE SEL]: Selects a gamma mode from eight types.

■ Advanced settings

Set with the [SCENE FILE] menu → [GAMMA SETTING].

[MASTER GAMMA]: Sets the master gamma in 0.01 steps.

- When [FILM-REC] is selected in [GAMMA MODE SEL]
  [F-REC DYNAMIC LVL]: Sets dynamic range.
  [F-REC BLACK STR LVL]: Sets black stretch.
- When [VIDEO-REC] is selected in [GAMMA MODE SEL]
  [V-REC KNEE SLOPE]: Sets knee slope.
  [V-REC KNEE POINT]: Sets knee point.

[BLACK GAMMA]: Sets the gamma curve compression and expansion of dark areas.

[B.GAMMA RANGE]: Sets the maximum level to perform compression/expansion.

NOTE

- Gamma function cannot be set when the [SYSTEM] menu → [COLOR SETTING] is set to [V-Log].

Knee function

This function sets the compression of video signals to prevent halation in images.

■ General settings

Use the camera with the factory settings.

■ Advanced settings

Set with the [SCENE FILE] menu → [KNEE SETTING].

[KNEE MODE]: Sets the operation mode of knee function ([AUTO]/[MANUAL]/[OFF]).

- When [AUTO] is selected in [KNEE SETTING]
  [A.KNEE RESPONSE]: Sets the speed of response. The smaller the setting value, the faster the response speed is.
- When [MANUAL] is selected in [KNEE SETTING]
  [KNEE POINT]: Sets the knee point position in 0.5% steps.
  [KNEE SLOPE]: Sets the knee inclination.

NOTE

- Knee function cannot be set when the [SYSTEM] menu → [COLOR SETTING] is set to [V-Log].

White clip function

This function sets the brightest part of video signals to be not brighter than a certain level.

■ General settings

Use the camera with the factory settings.

■ Advanced settings

Set with the [SCENE FILE] menu → [WHITE CLIP SETTING].

[WHITE CLIP]: Turns the white clip function [ON]/[OFF]. This enables the [WHITE CLIP LEVEL] setting value when the function is [ON].

[WHITE CLIP LEVEL]: Sets the white clip level.

NOTE

- White clip function cannot be set when the [SYSTEM] menu → [COLOR SETTING] is set to [V-Log].

Variable frame rate (VFR) recording function/super slow recording function

It is possible to acquire smooth slow motion or quick motion vide by shooting with a different frame rate from the frame rate to play back.

Variable frame rate (VFR)

Allows the high-speed shooting from 1fps to maximum of 60fps.

1 In the [SYSTEM] menu → [FREQUENCY]/[FILE FORMAT]/[REC FORMAT], select the resolution and codec for recording video and the frequency for the reference frame rate.

- For the combinations that can be set, refer to “Selecting the resolution, codec, and frame rate for recording video” (page 124).
  The range of the frame rate that can perform high-speed shooting differs depending on the setting.

2 Select the [SCENE FILE] menu → [VFR] → [ON].

- This can also be set even with the USER button. Refer to “Functions assigned to USER buttons” (page 51).

3 Set the frame rate in accordance with the shooting condition in the [SCENE FILE] menu → [FRAME RATE].

- This can also be set with the multi manual function. Refer to “Multi manual function” (page 157).

4 Press the REC button.

Variable frame rate recording is started.

Super slow

This allows high-speed shooting of 120fps/100fps.

1 In the [SYSTEM] menu → [FREQUENCY]/[FILE FORMAT]/[REC FORMAT], select the resolution and codec for recording video and the frequency for the reference frame rate.

- For the combinations that can be set, refer to “Selecting the resolution, codec, and frame rate for recording video” (page 124).

2 Select the [SYSTEM] menu → [SUPER SLOW] → [ON].

- This can also be set even with the USER button.
  Refer to “Functions assigned to USER buttons” (page 51).

3 Press the REC button.

Super slow recording starts.

NOTE

- Audio cannot be recorded with the variable frame rate recording and super slow recording. However, audio is also recorded if the frame rate same as the recording frame frequency of [REC FORMAT] is set when using variable frame rate recording.
- The screen may be disrupted or become dark when the frame rate setting is changed.
- The frame rate cannot be changed while recording.
- The [RECORDING] menu → [TC/UB] → [FREE/REC RUN] is fixed to [REC RUN].
- The recording is paused when ten hours has past from the time the recording was started. The recording is automatically resumed after few seconds. When performing high-speed shooting, the recording time will be shorter than 10 hours depending on the ratio of the frame rate of the recording format and the variable frame rate. The recording will stop in 5 hours when the recording frame frequency of [REC FORMAT] is set to 23.98p and the [SCENE FILE] menu → [FRAME RATE] is set to [48fps].
- For recording limitations of variable frame rate recording or super slow recording, refer to “Recording function that cannot be used simultaneously” (page 221).
- It may take time to stop recording even if recording is stopped right after recording is started.
  When the recording frame frequency of [REC FORMAT] is set to 59.94p and the [SCENE FILE] menu → [FRAME RATE] is set to [1fps], recording is continued for a maximum of one minute until the length of the clip after shooting becomes one second.

Audio input

The camera can record four channels of audio.
(However, two channels when AVCHD is selected as the recording file format)
The audio to input to each channel can be switched to the built-in microphone, an external microphone, or a connected audio device.

Switching the audio input

■ Audio recording format

The audio recording format such as compression format varies depending on the recording mode.

Recording mode	Recording format	Sampling rate/bit
P2	Linear PCM (LPCM)	48 kHz/24 bit*
MOV	Linear PCM (LPCM)	48 kHz/24 bit
AVCHD	Dolby Audio™	48 kHz/16 bit

* When the [REC FORMAT] is set to following, it will be 48 kHz/16 bit.
[1080-59.94p/AVC-G12]
[1080-50.00p/AVC-G12]
[1080-59.94i/AVC-G12]
[1080-50.00i/AVC-G12]
[720-59.94p/AVC-G12]
[720-50.00p/AVC-G12]
When the [REC FORMAT] is set to following, 48 kHz/16 bits or 48 kHz/24 bits can be selected in the [SYSTEM] menu → [AUDIO SAMPLE RES.].
[1080-50.00i/AVC-I100]
[1080-50.00p/AVC-I100]
[1080-59.94i/AVC-I100]
[1080-59.94p/AVC-I100]
[720-50.00p/AVC-I100]
[720-59.94p/AVC-I100]
[1080-50.00i/AVC-I50]
[1080-59.94i/AVC-I50]
[720-50.00p/AVC-I50]
[720-59.94p/AVC-I50]

■ Selecting audio input signals

Selects the audio signal to record in the audio channel 1/audio channel 2.
Audio signal to record in the audio channel 3/audio channel 4 is automatically set with the settings of the <CH1 SELECT> switch and the <CH2 SELECT> switch.

Item		Input signal to be recorded			
<CH1 SELECT>	<CH2 SELECT>	Audio channel 1	Audio channel 2	Audio channel 3	Audio channel 4
<INT(L)>	<INT(R)>	Built-in microphone <L>	Built-in microphone <R>	<AUDIO INPUT 1> terminal	<AUDIO INPUT 2> terminal
	<INPUT1>	Built-in microphone <L>	<AUDIO INPUT 1> terminal	<AUDIO INPUT 1> terminal	Built-in microphone <R>
	<INPUT2>	Built-in microphone <L>	<AUDIO INPUT 2> terminal	<AUDIO INPUT 1> terminal	Built-in microphone <R>
<INPUT1>	<INT(R)>	<AUDIO INPUT 1> terminal	Built-in microphone <R>	Built-in microphone <L>	<AUDIO INPUT 2> terminal
	<INPUT1>	<AUDIO INPUT 1> terminal	<AUDIO INPUT 1> terminal	Built-in microphone <L>	Built-in microphone <R>
	<INPUT2>	<AUDIO INPUT 1> terminal	<AUDIO INPUT 2> terminal	Built-in microphone <L>	Built-in microphone <R>
<INPUT2>	<INT(R)>	<AUDIO INPUT 2> terminal	Built-in microphone <R>	Built-in microphone <L>	<AUDIO INPUT 2> terminal
	<INPUT1>	<AUDIO INPUT 2> terminal	<AUDIO INPUT 1> terminal	Built-in microphone <L>	Built-in microphone <R>
	<INPUT2>	<AUDIO INPUT 2> terminal	<AUDIO INPUT 2> terminal	Built-in microphone <L>	Built-in microphone <R>

When using the built-in microphone

1 Set the <CH1 SELECT> switch to the <INT(L)> position.

The audio signal of the built-in microphone <L> is recorded in the audio channel 1.

2 Set the <CH2 SELECT> switch to the <INT(R)> position.

The audio signal of the built-in microphone <R> is recorded in the audio channel 2.

NOTE

- To decrease the wind noise of the microphone, select the [AUDIO] menu → [REC CH SETTINGS] → [CH1 MIC LOWCUT]/[CH2 MIC LOWCUT]/[CH3 MIC LOWCUT]/[CH4 MIC LOWCUT] → [ON].

When using an audio device or an external microphone

1 Connect an audio device or an external microphone to the <AUDIO INPUT 1>/<AUDIO INPUT 2> terminal.

2 Switch the connected audio input with the <INPUT1>/<INPUT2> switch.

Connected device	Menu settings (you can set each channel individually)		
	<INPUT1>/<INPUT2>	[INPUT1 MIC LEVEL]/[INPUT2 MIC LEVEL]*1	[INPUT1 LINE LEVEL]/[INPUT2 LINE LEVEL]*2
Audio device	<LINE>	Disabled	[4dB], [0dB]
External microphone	<MIC>	[–40dB], [–50dB], [–60dB]	Disabled
External microphone (with power supply)	<+48V>	[–40dB], [–50dB], [–60dB]	Disabled

*1 Factory setting: [–50dB]
*2 Factory setting: [0dB]

NOTE

- When using a super-directional microphone AG-MC200G (optional), set [INPUT1 MIC LEVEL]/[INPUT2 MIC LEVEL] to [–50dB].

Adjusting the audio recording level

There are manual adjustment and automatic adjustment as the adjustment method of the audio recording level.
When [AUDIO CH1 LEVEL]/[AUDIO CH2 LEVEL] is assigned to the USER button, adjustment method of the recording level for audio channel 1 and audio channel 2 can be switched between manual and automatic with the USER button.

Automatic adjustment of the recording level

1 Select the [AUDIO] menu → [REC CH SETTINGS] → [CH1 LEVEL]/[CH2 LEVEL]/[CH3 LEVEL]/[CH4 LEVEL] → [AUTO].

- Audio channel 1 to audio channel 4 can be individually set.
- Following settings are disabled when the [AUDIO] menu → [REC CH SETTINGS] → [CH1 LEVEL]/[CH2 LEVEL] → [AUTO] is selected.
  - Adjustment of the recording level by the <AUDIO LEVEL CH1>/<AUDIO LEVEL CH2> dial
  - [AUDIO] menu → [REC CH SETTINGS] → [CH1 LIMITER]/[CH2 LIMITER] setting
- Following settings are disabled when the [AUDIO] menu → [REC CH SETTINGS] → [CH3 LEVEL]/[CH4 LEVEL] → [AUTO] is selected.
  - [AUDIO] menu → [REC CH SETTINGS] → [CH3 LEVEL CONTROL]/[CH4 LEVEL CONTROL] setting
  - [AUDIO] menu → [REC CH SETTINGS] → [CH3 LIMITER]/[CH4 LIMITER] setting

Manual adjustment of the recording level

■ Audio channel 1/audio channel 2 settings

1 Select the [AUDIO] menu → [REC CH SETTINGS] → [CH1 LEVEL]/[CH2 LEVEL] → [MANUAL].

2 Adjust the recording level with the <AUDIO LEVEL CH1>/<AUDIO LEVEL CH2> dial.

- When the input level of audio exceeds 0 dB, the level display exceeding 0 dB is displayed in red in the camera image screen and the audio level meter in the AUDIO screen of the the mode check. This is indicating that the input volume is too high.
  Adjust so that the maximum value of the audio level does not exceed 0 dB.

■ Audio channel 3/audio channel 4 settings

1 Select the [AUDIO] menu → [REC CH SETTINGS] → [CH3 LEVEL]/[CH4 LEVEL] → [MANUAL].

2 Adjust the recording level with the [AUDIO] menu → [REC CH SETTINGS] → [CH3 LEVEL CONTROL]/[CH4 LEVEL CONTROL].

The larger the value, the larger the level.

NOTE

- Following setting is enabled when the [AUDIO] menu → [REC CH SETTINGS] → [CH1 LEVEL]/[CH2 LEVEL]/[CH3 LEVEL]/[CH4 LEVEL] → [MANUAL] is selected.
  - [AUDIO] menu → [REC CH SETTINGS] → [CH1 LIMITER]/[CH2 LIMITER]/[CH3 LIMITER]/[CH4 LIMITER] setting

Recording standard level

The recording standard level can be set.

1 Select the [AUDIO] menu → [REC CH SETTINGS] → [HEAD ROOM] → [12dB]/[18dB]/[20dB].

[20dB]: Select this when matching the recording standard level with the Panasonic broadcasting AJ series camera.
[12dB]: Select this when matching the recording standard level with the Panasonic professional AG-UX series camera.

Confirming the audio input level

The input level of the audio can be confirmed in the camera image screen and the AUDIO screen of the mode check.

Monitoring the audio

Audio recorded with the camera can be heard with a speaker or headphones.
Audio is not output from the speaker during shooting.

Setting the output audio

Sets the audio channel and the format to be output from the headphone terminal.

1 Select the [AUDIO] menu → [OUTPUT SETTINGS] → [AUDIO OUT].

2 Select the type of audio.

[CH1]: Outputs the signal for audio channel 1 as monaural.
[CH2]: Outputs the signal for audio channel 2 as monaural.
[CH1/2 STEREO]: Outputs the signals of the audio channel 1 and the audio channel 2 as stereo.
[CH1/2 MIX]: Mixes the signals of the audio channel 1 and the audio channel 2 and outputs as monaural.
[CH3]: Outputs the signal for audio channel 3 as monaural.
[CH4]: Outputs the signal for audio channel 4 as monaural.
[CH3/4 STEREO]: Outputs the signals of the audio channel 3 and the audio channel 4 as stereo.
[CH3/4 MIX]: Mixes the signals of the audio channel 3 and the audio channel 4 and outputs as monaural.

NOTE

- The audio channel of the output audio (audio channel 1/2 and audio channel 3/4) is switched while the USER button to which [AUDIO MON SEL] is assigned is pressed or the USER button icon is touched.
- If [AUDIO OUT] is assigned to the USER button, pressing the USER button switches the audio channel to output and format.
  When [AUDIO] menu → [OUTPUT SETTINGS] → [AUDIO OUT] is set to [CH1]/[CH2]/[CH1/2 STEREO]/[CH1/2 MIX], toggles [CH1], [CH2], [CH1/2 STEREO], and [CH1/2 MIX] in order each time the USER button is pressed or the USER button icon is touched.
  When [AUDIO] menu → [OUTPUT SETTINGS] → [AUDIO OUT] is set to [CH3]/[CH4]/[CH3/4 STEREO]/[CH3/4 MIX], toggles [CH3], [CH4], [CH3/4 STEREO], and [CH3/4 MIX] in order each time the USER button is pressed or the USER button icon is touched.

Confirming audio input setting

The setting for the audio input can be confirmed in the AUDIO screen of the mode check.
For details, refer to “Mode check display” (page 182).

Special recording function

Special recording such as pre-recording or relay recording is possible by setting the menu.

Pre-recording

Records the video and audio from specific time before the operation to start the recording.

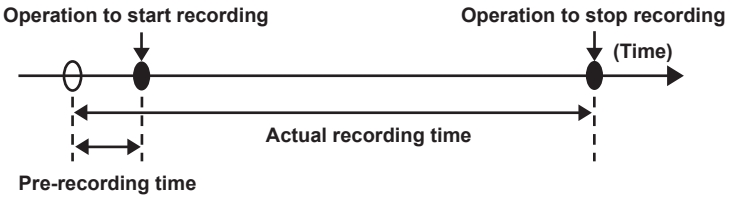

The pre-recording time varies depending on the setting of the [SYSTEM] menu → [FILE FORMAT]/[REC FORMAT].

- When [FILE FORMAT] is set to [P2]: Approximately 3 seconds
- When [FILE FORMAT] is set to [MOV], and [REC FORMAT] is set to [2160-29.97p/422ALL-I 400M], [2160-25.00p/422ALL-I 400M], or [2160-23.98p/422ALL-I 400M]: Approximately 3 seconds
- When [FILE FORMAT] is set to [MOV], and [REC FORMAT] is set to [2160-59.94p/HEVC LongGOP 200M], [2160-59.94p/HEVC LongGOP 100M], [2160-59.94p/420LongGOP 150M], [2160-50.00p/HEVC LongGOP 200M], [2160-50.00p/HEVC LongGOP 100M], [2160-50.00p/420LongGOP 150M], [2160-29.97p/HEVC LongGOP 150M], [2160-29.97p/422LongGOP 150M], [2160-29.97p/420LongGOP 100M], [2160-25.00p/HEVC LongGOP 150M], [2160-25.00p/422LongGOP 150M], [2160-25.00p/420LongGOP100M], [2160-23.98p/HEVC LongGOP 150M], [2160-23.98p/422LongGOP 150M], or [2160-23.98p/420LongGOP 100M]: Approximately 5 seconds
- When set to other than above: Approximately 10 seconds

1 Select the [RECORDING] menu → [PRE REC] → [ON].

[P] is displayed in the recording status display of the camera image screen.

2 Press the REC button.

NOTE

- The video and audio may not be able to record for specific time before in following cases.
  - Immediately after the power is set to < | > (ON)
  - Immediately after opening the menu
  - Immediately after the memory card is inserted
  - Immediately after playing back the recorded video
  - Immediately after closing the thumbnail screen
  - When [ON]/[OFF] are toggled in the [SCENE FILE] menu → [VFR] or [SCENE FILE] menu → [FRAME RATE] is set
  - During the time from recording stop until completion of writing to the memory card
- When [PRE REC] is set to [ON], the [RECORDING] menu → [TC/UB] → [FREE/REC RUN] is fixed to [FREE RUN].
- The pre-recording is canceled once when three hours has past without starting the recording.
- For recording limitations of the pre-recording, refer to “Recording function that cannot be used simultaneously” (page 221).
- Pre-recording cannot be performed if the remaining recording capacity of the memory card is less than one minute.

Relay recording

When inserting memory cards into the two card slots, recording can continue on the second memory card if the remaining recording capacity of the other memory card is exhausted.

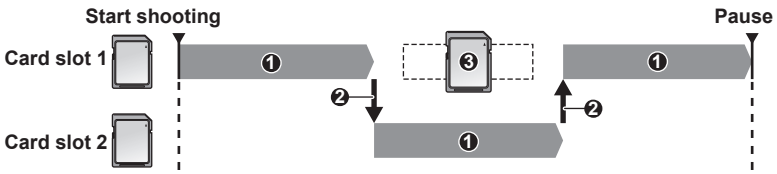

1 During recording

2 Automatically switch the recording target card slot

3 Replace with a different recordable memory card

1 Select the [RECORDING] menu → [2 SLOTS FUNC.] → [RELAY REC].

[RELAY] is displayed in the two slot function display of the camera image screen.
A slanted line is displayed on the [RELAY] display when the relay recording is not possible, such as when a memory card is not inserted in either of the two card slots.

2 Press the REC button.

- The recording target switches to another memory card when the remaining recording capacity of one of the memory cards is exhausted during recording and relay recording starts. The number of the card slot that became the recording target is displayed with black and white inverted. Recording can be performed on three or more memory cards. Replace the memory card with no more remaining recording capacity after the recording target has switched.
- To change the recording target card slot before starting the recording, press the <SLOT SEL> button. This will not operate during recording.

NOTE

- It may take some time to recognize the memory card when the memory card is inserted. When recording to three or more memory cards by replacing a memory card while recording, replace the memory card with recording capacity sufficiently left on the memory card that is recording.
- The recording target cannot be switched when the remaining recording capacity of the relay memory card is less than one minute.
- The maximum continuous recording time for relay recording is ten hours.
- The recording is stopped once when the recording time of relay recording exceeds ten hours. The recording is automatically resumed after few seconds.
- For recording limitations of the relay recording, refer to “Recording function that cannot be used simultaneously” (page 221).

Simultaneous recording

Insert memory cards into two card slots to record the same video onto two memory cards.

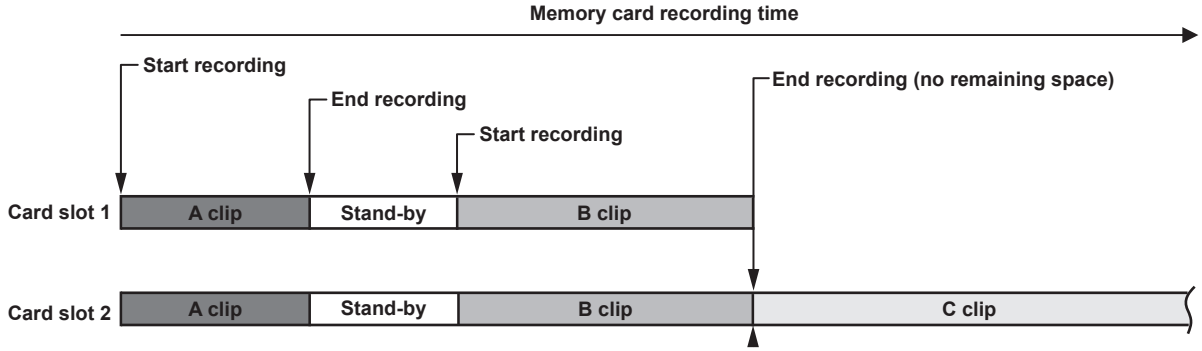

1 Select the [RECORDING] menu → [2 SLOTS FUNC.] → [SIMUL REC].

[SIMUL] is displayed in the two slot function display of the camera image screen.
A slanted line is displayed on the [SIMUL] display when simultaneous recording is not possible, such as when a memory card is not inserted in either of the two card slots.

2 Press the REC button.

- The simultaneous recording will stop when the remaining recording capacity of one of the memory cards is exhausted.
  A slanted line is displayed in the [SIMUL] display when simultaneous recording is not possible.
  To start the simultaneous recording again, replace the memory card that has run out of the recording capacity with another memory card, and then press the REC button.
- When the REC button is pressed without replacing the memory card, standard recording is performed to the memory card with remaining recording capacity.

NOTE

- Use of memory cards with the same Speed Class or capacity for simultaneous recording is recommended.
  The recording may stop due to insufficient speed when memory cards with different Speed Classes or capacities are used. If the recording is stopped, the video right before stopping may become invalid recording.
- Start the recording after both of the two memory cards have been recognized. When the recording starts before both memory cards are recognized, the camera performs standard recording on one of the memory cards that has been recognized. The camera confirms the status of the memory card every time the recording is completed. If both cards are recognized at that time, it will perform the simultaneous recording from the next recording.
- When recording to one of the memory cards stops due to a recording error during simultaneous recording, recording to the other memory card continues.
- If there is remaining recording capacity on one of the memory cards after completing the simultaneous recording, the memory card with remaining recording capacity automatically becomes the recording target. Standard recording will start when the REC button is pressed.
- Standard recording is performed when only one memory card is inserted even if the camera is set to simultaneous recording.
- Once the simultaneous recording is completed, [DEL LAST CLIP] (final clip delete function) assigned to the USER button will not operate.
- For the folder name and the file name when performing simultaneous recording in MOV format, refer to “Handling the recording data” (page 43).
- For recording limitations of the simultaneous recording, refer to “Recording function that cannot be used simultaneously” (page 221).

Background recording

If the memory cards are inserted into two card slots, set the background recording mode and then press the REC button to start recording simultaneously on card slot 1 and card slot 2. On card slot 1, recording can be repeatedly started and stopped as necessary by operating the REC button. On card slot 2, the recording operation continues as background recording.

By performing background recording on card slot 2, you will not miss important scenes while recording is stopped.

For recording limitations of background recording, refer to “Recording function that cannot be used simultaneously” (page 221).

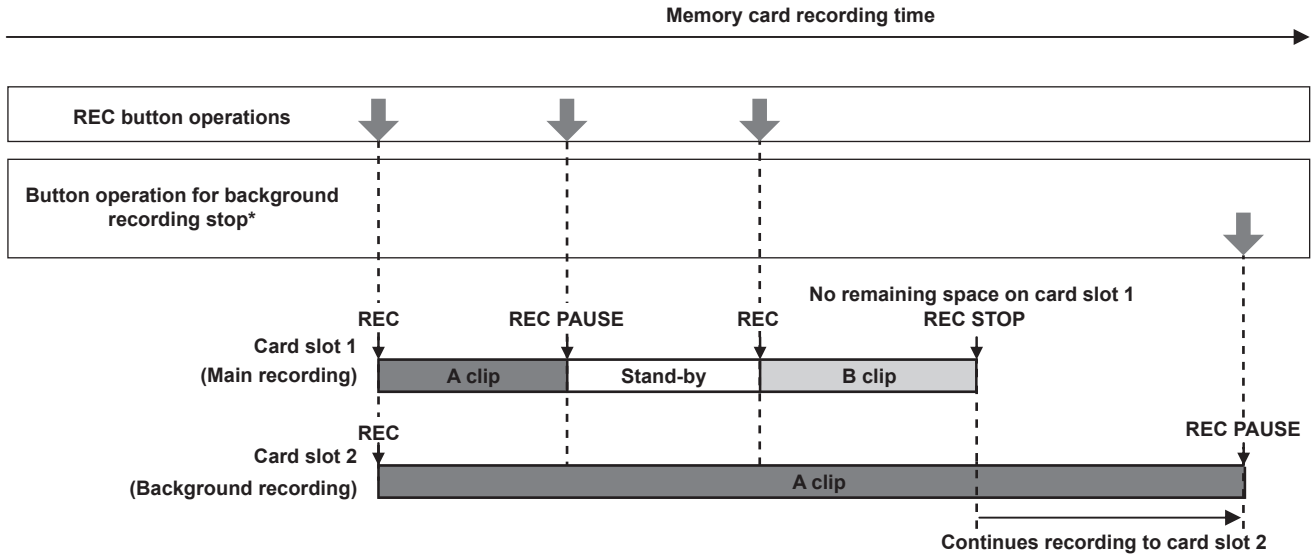

*USER button assigned to [BACKGR PAUSE]

Starting background recording

1 Select the [RECORDING] menu → [2 SLOTS FUNC.] → [BACKGR REC].

[BACKGR] is displayed in the two slot function display of the camera image screen.
A slanted line is displayed on the [BACKGR] display when background recording is not possible, such as when a memory card is not inserted in the card slot 2.

2 Press the REC button.

Recording starts simultaneously on card slot 1 and card slot 2.
Start or stop recording on card slot 1 with REC button operations.
On card slot 2, the recording operation continues as background recording.

NOTE

- Records on both card slot 1 and card slot 2 in the format set in the [SYSTEM] menu.
- Background recording cannot be performed in the following cases.
  - When the [RECORDING] menu → [REC FUNCTION] → [REC MODE] is set to anything other than [NORMAL]
- The lighting status of the tally lamp changes according to start or stop of recording on card slot 1.
- Time code is fixed to free run.
- Control of recording operation of the external equipment (such as recorder) connected to the <SDI OUT> terminal and the <HDMI> terminal is linked to the start/stop recording of the card slot 1.
- In background recording mode, deleting last clip function is disabled.
- The memory card in card slot 1 can be replaced even while background recording is performed on card slot 2 if recording on card slot 1 is stopped.
- In the background recording mode, standard recording can be performed on card slot 1 if a memory card for recording is not inserted in card slot 2 or the remaining recording capacity of the memory card in card slot 2 has run out.

Ending background recording

1 Press and hold the USER button to which [BACKGR PAUSE] is assigned for approximately five seconds or touch and hold the USER button icon for approximately five seconds and release.

The background recording stops on card slot 2.
The background recording on card slot 2 can also be stopped by pressing and holding the <EXIT> button for approximately five seconds.

NOTE

- The background recording on card slot 2 cannot end while recording is performed on card slot 1. End the background recording while recording is stopped on card slot 1.
- The background recording on card slot 2 ends in the following cases.
  - When the power is turned off
  - When the remaining recording capacity of the memory card has run out
  - When an error has occurred when writing to the memory card

Interval recording

The camera will record one frame at each set time interval.

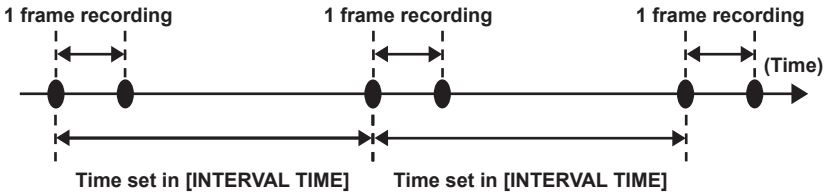

1 Select the [RECORDING] menu → [REC FUNCTION] → [REC MODE] → [INTERVAL].

[INTRVL] is displayed in the special recording function display of the camera image screen.

- This cannot be selected when the recording mode is set to AVCHD.

2 Set the time in the [RECORDING] menu → [REC FUNCTION] → [INTERVAL TIME].

3 Press the REC button.

- [I-REC] is displayed in red in the special recording function display of the camera image screen.
- The camera will repeat the operation of one frame recording at set time interval.
- To stop recording, press the REC button.
- Set [NORMAL] in the [RECORDING] menu → [REC FUNCTION] → [REC MODE] to clear the setting.
- Set whether to keep the settings after turning off the power in the [RECORDING] menu → [REC FUNCTION] → [REC MODE HOLD].

NOTE

- Audio is not recorded.
- Recorded data (data recorded until recording was stopped) is included in one clip.
- The [RECORDING] menu → [TC/UB] → [FREE/REC RUN] is fixed to [REC RUN].
- The [RECORDING] menu → [TC/UB] → [DF/NDF] is fixed to [NDF].
- [SDI REC REMOTE] and [HDMI REC REMOTE] will not operate.
- If the length of the clip is less than three seconds when the recording is stopped, the image of the final frame will be recorded to make the length of the clip to three seconds.
- The recording is stopped once when the length of the clip exceeds ten hours in the interval recording. The recording is automatically resumed after few seconds.
- For recording limitations of the interval recording, refer to “Recording function that cannot be used simultaneously” (page 221).

IR recording

A night time shooting using the IR light can be performed.

■ Assigning [IR REC] to the USER button

1 Select the [CAMERA] menu → [USER SW] → [USER1] to [USER12] → [IR REC].

Set so enable/disable of the IR recording can be switched with an arbitrary USER button.

■ Performing IR recording

1 Press the USER button to which [IR REC] is assigned or touch the USER button icon.

The camera will enter the IR recording mode.

2 Press the REC button.

IR recording is started.

NOTE

- This can also be set with the [CAMERA] menu → [SW MODE] → [IR REC].
- IR recording cannot be performed when the [SYSTEM] menu → [COLOR SETTING] is set to [V-Log].
- IR recording cannot be performed while using the face detection/tracking AE&AF function.

Clip metadata recording function

Information such as the name of the person recording or the name of the reporter, recording location, text memo, etc., can be loaded from the SD card and recorded as a clip metadata.

Items of the clip metadata

The clip metadata has following items:

[GLOBAL CLIP ID]	Displays the global clip ID indicating the recording condition of the clip.
[USER CLIP NAME]	Displays the name of the clip that the user has set.*1
[VIDEO]	Displays [FRAME RATE] (frame rate of the clip), [PULL DOWN] (pull-down method), and [ASPECT RATIO] (aspect ratio).
[AUDIO]	Displays [AUDIO SAMPLING RATE] (sampling frequency of the recording audio) and [AUDIO BIT RATE] (quantized number of bits for the recording audio).

[ACCESS]	Displays [CREATOR] (name of the clip creator), [CREATION DATE] (date the clip was created), [LAST UPDATE DATE] (date the clip was last updated), and [LAST UPDATE PERSON] (name of the person last updated the clip).
[DEVICE]	Displays [MANUFACTURER] (name of the manufacturer of the device used to record), [SERIAL NO.] (serial number of the device used to record), and [MODEL NAME] (model name of the device used to record).
[SHOOT]	Displays [SHOOTER], [START DATE], [END DATE], [ALTITUDE], [LONGITUDE], [LATITUDE], [SOURCE], and [PLACE NAME].
[SCENARIO]	Displays [PROGRAM NAME], [SCENE NO.], and [TAKE NO.].
[NEWS]	Displays [REPORTER], [PURPOSE], and [OBJECT].
[MEMO]*2	Displays [NO.] (number of the text memo), [OFFSET] (frame position from the start of the clip where the text memo is added), [PERSON] (person recording the text memo added to the clip), and [TEXT] (content of the text memo).
[THUMBNAIL]	Displays the frame position (frame offset) and the size (height and width) of the image to be the base of the thumbnail.
[PROXY]	Displays information such as the format of the proxy if the proxy is added.

*1 The recording method for [USER CLIP NAME] can be selected. For details, refer to “Selecting the recording method for [USER CLIP NAME]” (page 146).
*2 Always enter [TEXT] when entering [MEMO]. Recording only with [PERSON] or [OFFSET] is not possible.

Following items can be set by loading a metadata upload file in the SD card.

- [USER CLIP NAME]
- [CREATOR], [LAST UPDATE PERSON] in [ACCESS]
- [SHOOTER], [PLACE NAME] in [SHOOT]
- [PROGRAM NAME], [SCENE NO.], [TAKE NO.] in [SCENARIO]
- [REPORTER], [PURPOSE], [OBJECT] in [NEWS]
- [PERSON], [TEXT] in [MEMO]

Other items will be automatically set during the recording.

The metadata upload file can be written in an SD card by using P2 Viewer Plus on a computer.

Install P2 Viewer Plus into the computer from the support desk in following website.

https://pro-av.panasonic.net/

For details of the SD card to be used, refer to “Memory cards supported by the camera” (page 39).

NOTE

- The file edited with anything other than P2 Viewer Plus will display [LOAD NG], and it may not be able to load.

Loading the clip metadata (metadata upload)

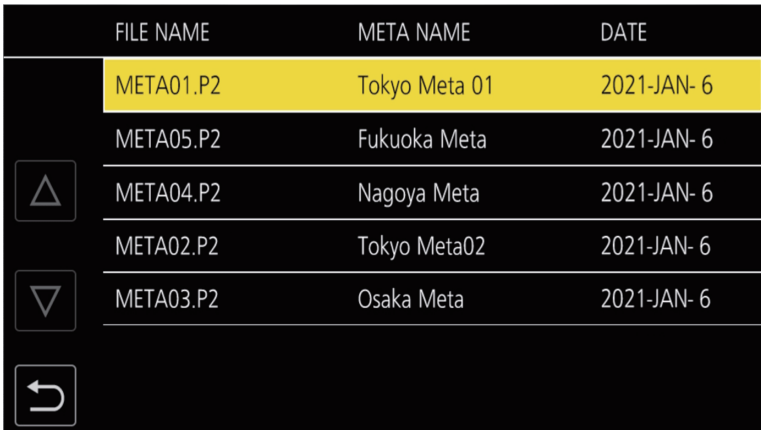

Fig. 1

1 Insert an SD card with a file describing the clip metadata (metadata upload file) into the camera.

2 Select the [RECORDING] menu → [REC META DATA] → [LOAD].

A list of metadata upload files stored in the specified folder in the SD card is displayed.
The card slot to perform loading and saving can be set in the [OTHERS] menu → [FILE] → [SLOT FOR LOAD/SAVE].

3 Select the name of the file to load. (Fig. 1)

4 Select [SET].

The file is loaded.

- The loaded metadata is held even if the power is turned off.
- For details about confirming the loaded data, refer to “Confirming and modifying the loaded metadata” (page 146).
- An error message may be displayed. For details about the error message, refer to “Cases indicated by error messages” (page 217).

NOTE

- Only the characters that can be displayed in the camera will be displayed for the metadata upload file name and the metadata name. The characters that cannot be displayed will be truncated. It will be displayed as [*****...] if all characters cannot be displayed.

- It will be displayed as [NO DATA] if the metadata name is not described in the metadata upload file.

Confirming and modifying the loaded metadata

Content of the metadata loaded from the SD card can be confirmed.

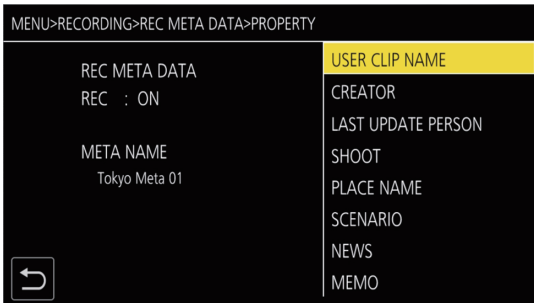

Fig. 1

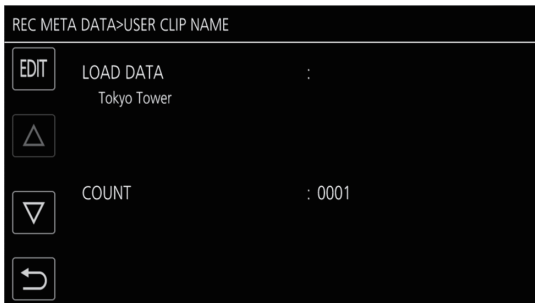

Fig. 2

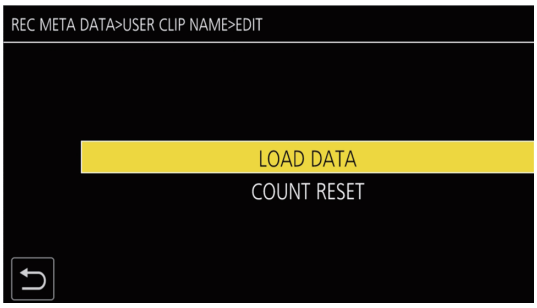

Fig. 3

1 Select the [RECORDING] menu → [REC META DATA] → [PROPERTY].

A list of the metadata is displayed. (Fig. 1)

2 Select the item to confirm.

Content of each setting of the loaded metadata can be confirmed. (Fig. 2)

3 To modify the metadata, select [EDIT].

If there are multiple items that can be modified, a selection screen is displayed, so select the item to modify. (Fig. 3)

Setting to record/not record the loaded metadata

1 Set the [RECORDING] menu → [REC META DATA] → [RECORD] → [ON]/[OFF].

- The factory setting is [OFF].

Selecting the recording method for [USER CLIP NAME]

The recording method of [USER CLIP NAME] can be selected from two methods of either [TYPE1] or [TYPE2] in the [RECORDING] menu → [REC META DATA] → [USER CLIP NAME].

■ [TYPE1] (factory settings)

Condition of the clip metadata	[USER CLIP NAME] to be recorded
If the clip metadata is loaded	Uploaded data
If the clip metadata is not loaded, or set not to record the loaded clip metadata	Same as [GLOBAL CLIP ID]

■ [TYPE2]

Condition of the clip metadata	[USER CLIP NAME] to be recorded
If the clip metadata is loaded	Uploaded data + [COUNT]*
If the clip metadata is not loaded, or set not to record the loaded clip metadata	Same as [CLIP NAME]

* [COUNT] is displayed as a four-digit number.
[COUNT] is increased one at a time when a new clip is generated if the clip metadata is loaded and the recording method is set to [TYPE2].

Resetting [COUNT]

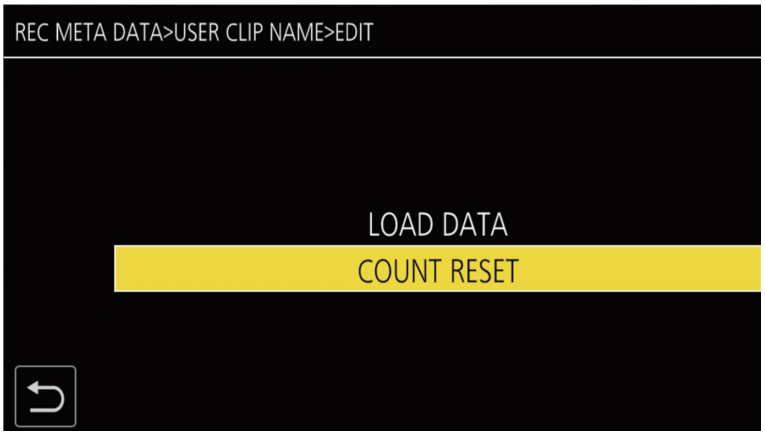

Fig. 1

1 **Select the [RECORDING] menu → [REC META DATA] → [PROPERTY].**

2 **Select [USER CLIP NAME], then select [EDIT].**

3 **Move the cursor to [COUNT RESET]. (Fig. 1)**

A confirmation screen is displayed.

4 **Select [SET].**

[COUNT] is set to 1.

Selecting recording the [CARD SERIAL]

Enable the function to record the card serial number to the metadata (text memo without offset).

1 **Select the [RECORDING] menu → [REC META DATA] → [CARD SERIAL] → [ON].**

Initializing the metadata setting

1 **Select the [RECORDING] menu → [REC META DATA] → [INITIALIZE].**

A confirmation screen is displayed.

2 **Select [SET].**

The settings in the [RECORDING] menu → [REC META DATA] including the loaded metadata are returned to the factory settings.

Shot mark recording function

Shot mark is a marker attached to the thumbnail of a clip to distinguish from other clips.
It is possible to display or play back only the clips with the shot mark.

Adding shot mark

■ **Assigning [SHOT MARK] to the USER button**

1 **Select the [CAMERA] menu → [USER SW] → [USER1] to [USER12] → [SHOT MARK].**

■ **Adding shot mark**

1 **Press the USER button with [SHOT MARK] assigned while recording or while paused after recording.**

[MARK ON] is displayed in the camera image screen, and the shot mark is added to the clip that is recording. In case of paused after recording, the shot mark is added to the clip that was recorded immediately before.
[MARK OFF] is displayed and the shot mark is cleared by pressing again.

NOTE

- A shot mark can be added/cleared only on the clips in P2 format.
- A shot mark can also be added while displaying the thumbnail. (page 166)
- A shot mark cannot be added during recording in case of interval recording.
- A shot mark can only be added from the thumbnail display after recording in case of simultaneous recording.
- [SHOT MARK INVALID] is displayed when the USER button is pressed if the operation is invalid.
- Adding/clearing of the shot mark is not possible while playing back or paused during the playback.
- There are following restrictions when a shot mark is to be added/cleared for a linked clip such as a clip recorded across multiple memory cards, etc.
  - All the memory cards constructing the clip must be inserted into the card slots.
  - A shot mark is added only to the first clip of the linked clips.

Recording the proxy data

The P2 recording of this camera can simultaneously record AVC-G6 format different from the main material recording as a proxy data.

- Resolution of the proxy data is the same as the main material recording.
- The file format is MOV format that is also appropriate to a nonlinear editing. For details of format, refer to “Specifications” (page 226).
- When it is set to [V-Log] for recording the main material, the image to be recorded as a proxy data can be set to either [V-Log] or [V-709].
  Also, when it is set to [HDR] for recording the main material, the image to be recorded as a proxy data can be set to either [SDR] or [HDR].

1 Select the [RECORDING] menu → [PROXY SETTING] → [PROXY REC] → [ON].

[PXY] is displayed next to the recording format in the camera image screen. This indicates that the recording of the proxy data is set.

2 Press the REC button.

The proxy data is simultaneously recorded with the main material.

- The proxy data is recorded in the memory card in the same card slot as the main material recording. Recording of the proxy data only is not possible.
- The proxy data is recorded as an image audio file and a realtime metadata file.
  - Image audio file: XXXXXXXX.MOV
  - Realtime metadata file: XXXXXXXX.BIN
    Time code and user bits information are recorded for each frame.
- [P] is displayed in the thumbnail screen on the clip with a proxy data recorded.
  Also, the recording information of the proxy data can be confirmed in the clip information display screen.
  For details, refer to “Confirming the detailed information of the proxy data” (page 148).
- The recorded proxy data cannot be played back in the camera. It can be played back with P2 Viewer Plus.
  For information regarding P2 Viewer Plus, refer to the following website.
  https://pro-av.panasonic.net/

NOTE

- When [FILE FORMAT] is set to anything other than [P2], the proxy data cannot be recorded.
- When [REC FORMAT] is set to AVC-G12, the proxy data cannot be recorded.
- For the recording restriction during the proxy recording, refer to “Recording function that cannot be used simultaneously” (page 221). Also, the recording function of the proxy data cannot be simultaneously used with the streaming function (page 203).
- The clip with proxy data recorded in hybrid log gamma cannot be played back with P2 Viewer Plus for Windows. Play back using Windows Media Player equipped with Windows, or VLC Media Player Ver.2.0 or later.
- Restoration of the proxy data is not possible. When a clip with proxy data is restored, only the main material is restored and the proxy data is deleted.

Confirming the detailed information of the proxy data

The detailed information of the proxy data for the recorded clip can be confirmed with the [THUMBNAIL] menu → [CLIP] → [INFORMATION] in the thumbnail screen.

For the operation, refer to “Display of clip information” (page 162).

■ Detailed information regarding the proxy data

[FORMAT]	Displays the file format of the recording data.
[VIDEO CODEC]	Displays the video codec information of the recording data.
[VIDEO FRAME RATE]	Displays the video frame rate information of the recording data.
[VIDEO BIT RATE]	Displays the video bit rate information of the recording data.
[VIDEO RESOLUTION]	Displays the video resolution of the recording data.
[ASPECT RATIO]	Displays the aspect ratio of the recording data.
[TC SUPER]	Displays whether the TC (time code) display is superimposed to the recording video.
[AUDIO CODEC]	Displays the audio codec information of the recording data.
[AUDIO BIT RATE]	Displays the audio bit rate information of the recording data.
[AUDIO SAMPLING RATE]	Displays the audio sampling rate information of the recording data.
[NUM.OF AUDIO CH]	Displays the number of audio channels of the recording data.

Convenient shooting functions

Zebra patterns display

The camera can display two types of zebra patterns to the output image from the LCD monitor.

1 Select the [VIDEO OUT/LCD/VF] menu → [EI ASSIST] → [ZEBRA] → [ON].

- Select [MOMENT]. The zebra pattern is displayed for approximately five seconds when the the USER button to which [ZEBRA] is assigned is pressed or the USER button icon is touched.
- Factory setting: [OFF]

Setting the detection level

1 Set each item in the [VIDEO OUT/LCD/VF] menu → [EI ASSIST].

Item	Description of settings
[ZEBRA1 DETECT]	Sets the detection level of zebra pattern 1. [0%]…[109%] (Factory setting: [80%])
[ZEBRA2 DETECT]	Sets the detection level of zebra pattern 2. [0%]…[109%] (Factory setting: [100%])
[ZEBRA2]	Enables/disables zebra pattern 2 and selects [SPOT]. [ON], [SPOT], [OFF] (Factory setting: [OFF])

■ **Display area of the zebra pattern**

The display area of the zebra pattern varies depending on the [VIDEO OUT/LCD/VF] menu → [EI ASSIST] setting.

When [SPOT] is selected in [ZEBRA2], the area corresponding to the [ZEBRA1 DETECT] setting value to the [ZEBRA2 DETECT] setting value is displayed in zebra pattern.

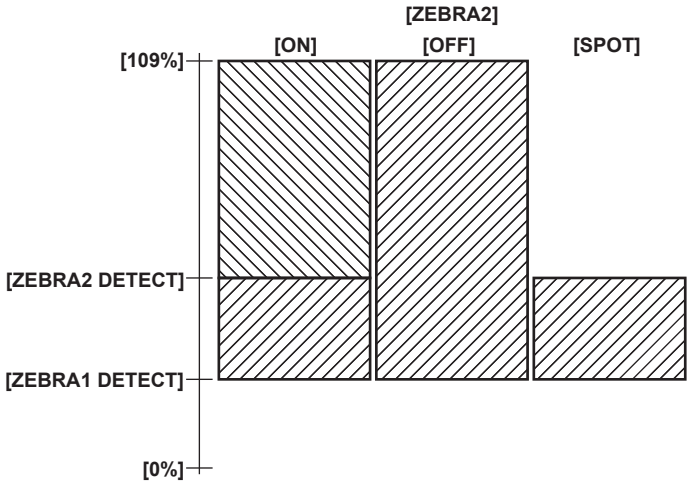

NOTE

- The zebra pattern cannot be recorded.
- The zebra pattern is not displayed while displaying the color bars.
- The zebra pattern is not displayed when the [SCENE FILE] menu → [GAMMA MODE SEL] → [HLG] is selected.
- The zebra pattern is not displayed when the [SYSTEM] menu → [COLOR SETTING] → [V-Log] is selected.

Displaying the center marker

A center marker can be displayed.

1 Select the type of the center marker in the [VIDEO OUT/LCD/VF] menu → [MARKER] → [CENTER MARKER].

- The center marker is not displayed when [OFF] is selected.

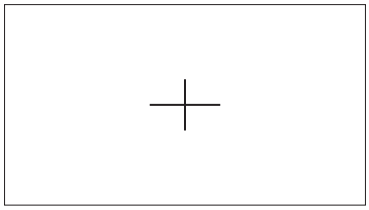

Displaying the safety zone marker

A safety zone marker can be displayed.

1 Select the type of the frame in the [VIDEO OUT/LCD/VF] menu → [MARKER] → [SAFETY MARKER].

- The safety zone marker is not displayed when [OFF] is selected.

Setting the size of the frame.

1 Select the size of the frame in the [VIDEO OUT/LCD/VF] menu → [MARKER] → [SAFETY AREA].

Displaying frame marker

A frame marker can be displayed.

1 Select the angle of the view in the [VIDEO OUT/LCD/VF] menu → [MARKER] → [FRAME MARKER].

- The frame marker is not displayed when [OFF] is selected.

NOTE

- This is fixed to [OFF] when the [SYSTEM] menu → [REC FORMAT] → [480-59.94i/AVCHD SA]/[576-50.00i/AVCHD SA] and the [SYSTEM] menu → [ASPECT] → [4:3] are set.

Setting the display color

1 Select the display color in the [VIDEO OUT/LCD/VF] menu → [MARKER] → [FRAME COLOR].

NOTE

- The marker cannot be recorded.
- The marker is not displayed while displaying the color bars when the enlarged display function of the focus assist function is enabled.

Focus assist function

The focus assist function enables you to focus the target easily.

The recording image on the LCD monitor and the viewfinder can be displayed enlarged, or the focused area can be visually enhanced.

Enlarged display function

Center of the recording image is displayed enlarged to make it easier to focus.

To enable the enlarged display function, press the <FOCUS ASSIST> button, press the USER button to which [EXPAND] is assigned, or touch the USER button icon.

When enabling the enlarged display function by pressing the <FOCUS ASSIST> button

■ Assigning [EXPAND] to the <FOCUS ASSIST> button

Set to enable/disable the enlarged display function by toggling the setting with the <FOCUS ASSIST> button.

1 Select the [VIDEO OUT/LCD/VF] menu → [FOCUS ASSIST] → [FOCUS ASSIST SW] → [EXPAND].

■ Using the enlarged display function

1 Press the <FOCUS ASSIST> button.

Press the <FOCUS ASSIST> button again to return to the normal display.

When enabling the enlarged display function by pressing the USER button or touching the USER button icon

■ Assigning [EXPAND] to the USER button

Set so enable/disable of the enlarged display function can be switched with an arbitrary USER button.

1 Select the [CAMERA] menu → [USER SW] → [USER1] to [USER12] → [EXPAND].

■ Using the enlarged display function

1 Press the USER button to which [EXPAND] is assigned or touch the USER button icon.

Press the USER button or touch the USER button icon again to return to the normal display.
Pressing the <EXIT> button also returns to the normal display.

Setting the mode for enlarged display function

1 Select the mode for the enlarged display function in the [VIDEO OUT/LCD/VF] menu → [FOCUS ASSIST] → [EXPAND MODE].

[10SEC]: Disables the enlarged display function after ten seconds have elapsed.
[HOLD]: Enables the enlarged display function until the <FOCUS ASSIST> button assigned to [EXPAND] or the USER button is pressed or the USER button icon is touched again.
[UNTIL REC]: Enables the enlarged display function until starting the recording operation.

Setting the enlargement rate

1 Select the enlargement rate in the [VIDEO OUT/LCD/VF] menu → [FOCUS ASSIST] → [EXPAND VALUE].

- The enlargement rate can be selected from [×2], [×3], or [×4].

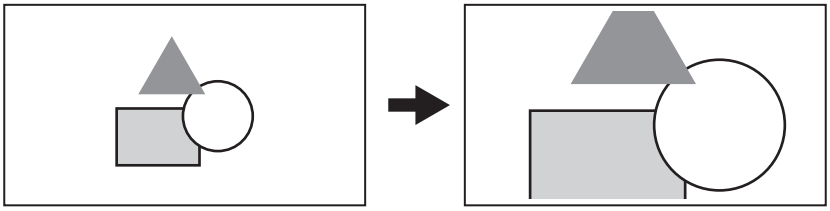

Setting the enlargement position

The enlargement position can be selected from nine positions when the enlarged display function is enabled.

In the case of the multidial: Turn the multidial to move the enlarged position. It will return to center when the multidial is pressed.

Operations can also be performed by pressing the <◀◀> button, <■> button, <▶▶> button, <▶/❚❚> button and <SET> button.

In case of touching the LCD monitor: The enlarged position will move by touching the vertical and horizontal arrow markers on the LCD monitor.

NOTE

- The enlarged display cannot be recorded.
- The enlarged display function cannot be used in following cases.
  - When using the face detection/tracking AE&AF function
  - When displaying the color bars
- Some of the displays such as marker will be hidden temporarily during enlarged display.
- The enlarged display and peaking display can be enabled at the same time by assigning each function to the <FOCUS ASSIST> button and USER button.

Peaking display

The peaking display will outline the contour of the focused image in red, green, or white.

To enable the peaking display, press the <FOCUS ASSIST> button, press the USER button to which [PEAKING] is assigned, or touch the USER button icon.

When enabling the peaking display by pressing the <FOCUS ASSIST> button

■ Assigning [PEAKING] to the <FOCUS ASSIST> button

Set to enable/disable the peaking display by toggling the setting with the <FOCUS ASSIST> button.

1 Select the [VIDEO OUT/LCD/VF] menu → [FOCUS ASSIST] → [FOCUS ASSIST SW] → [PEAKING].

■ Displaying the peaking display

1 Press the <FOCUS ASSIST> button.

Press the <FOCUS ASSIST> button again to return to the normal display.

When enabling the peaking display by pressing the USER button or touching the USER button icon

■ Assigning [PEAKING] to the USER button

Enable/disable the peaking display with an arbitrary USER button.

1 Select the [CAMERA] menu → [USER SW] → [USER1] to [USER12] → [PEAKING].

■ Displaying the peaking display

1 Press the USER button to which [PEAKING] is assigned or touch the USER button icon.

Press the USER button or touch the USER button icon again to return to the normal display.

Peaking display setting

1 Select the type of display in the [VIDEO OUT/LCD/VF] menu → [FOCUS ASSIST] → [FOCUS ASSIST SW].

[PEAKING]: Enables the peaking display.
[EXPAND]: Enables the enlarged display.

Setting the color for peaking display

Sets the color of the peaking display.

1 Select the color of the peaking display in the [VIDEO OUT/LCD/VF] menu → [FOCUS ASSIST] → [PEAKING COLOR].

- The color of the peaking display can be selected from [RED], [GREEN], or [WHITE].

NOTE

- The peaking display cannot be recorded.
- The peaking display is not displayed while displaying the color bars.
- The enlarged display and peaking display can be enabled at the same time by assigning each function to the <FOCUS ASSIST> button and USER button.

Monochrome display

1 Select the [VIDEO OUT/LCD/VF] menu → [FOCUS ASSIST] → [BLACK & WHITE] → [ON].

NOTE

- The monochrome display can be enabled while the peaking display is functioning.
  Select the [VIDEO OUT/LCD/VF] menu → [FOCUS ASSIST] → [BLACK & WHITE] → [DURING PEAKING].

Highlighting the outlines of images

It is easier to focus if the contours of images on the LCD monitor and viewfinder are highlighted.

The intensity of contours on the LCD monitor does not affect the images output or recorded by the camera.

Set the intensity of contours in the [VIDEO OUT/LCD/VF] menu → [FOCUS ASSIST] → [DETAIL] → [ON] and adjust the [VIDEO OUT/LCD/VF] menu → [FOCUS ASSIST] → [DETAIL LEVEL]/[DETAIL FREQ.].

Face detection/tracking AE&AF function

Face detection AE&AF function

A face is detected from the recording image, and the focus and exposure is adjusted to that face.

1 Select the [CAMERA] menu → [USER SW] → [USER1] to [USER12] → [FACE DETECT].

2 Select the function to use in the [CAMERA] menu → [SW MODE] → [FACE DETECT/TRACKING MODE].

- Select [FACE DETECT/TRACKING AF] when using with auto focus only.
- Select [FACE DETECT/TRACKING AE&AF] when using with auto focus and exposure correction.

3 Set to one of the following so the auto focus and the exposure correction (auto iris, auto shutter, auto gain) will operate.

- Auto mode: Toggle the <AUTO/MANUAL> switch to <AUTO>, and set the operation to automatically correct with the [CAMERA] menu → [AUTO SW]. (page 68)
- Auto focus: Toggle the <FOCUS> switch to <A>. (page 21)
- Auto iris: Switch to auto iris with the <IRIS> button. (page 21)

4 Press the USER button assigned to [FACE DETECT], or touch the USER button icon.

FACE AF or FACE AFAE is displayed in the camera image screen, and the face detection will start. (Face detection mode)

- The detected faces are displayed with frames (orange: main face frame, white: face detection frame).
  Auto focus and exposure correction are performed against the main face frame.
- Maximum number of the face detection frames is 9 frames, and the one that is larger and close to the center of the image is prioritized.

Tracking AE&AF function

By touching the arbitrary subject on the LCD monitor during the face detection mode, focus and exposure are constantly adjusted automatically while tracking that subject.

TRACK is displayed in the camera image screen, and the tracking will start. (Tracking mode)

- A green frame (tracking frame) is displayed on the touched subject.
- To change the subject to track, touch an arbitrary subject.
- The tracking mode will end and returns to face detection mode in following cases:
  - When the power is turned back on
  - When the <THUMBNAIL> button is pressed to switch between the thumbnail screen and the camera image screen
  - When the USER button assigned to [FACE DETECT] is pressed, or when the USER button icon is touched
  - When the <EXIT> button is pressed
  - When the touched subject cannot be tracked
    (The tracking frame will flash in red, and disappears after approximately three seconds. The tracking mode will continue if the subject is detected again before the tracking frame disappears, or if another subject is touched.)

NOTE

- Contents of the face detection frame and the tracking frame can be selected in the [VIDEO OUT/LCD/VF] menu → [INDICATOR] → [FACE DETECTION].
- The face detection frame and the tracking frame are not displayed in the output image from the <SDI OUT>/<HDMI>/<AV OUT> terminal.
- If the auto focus is not set, FACE AF or FACE AFAE is displayed and the face detection is not performed.
- When all of the auto iris, auto shutter, and auto gain are disabled, the exposure correction will not operate even if the [CAMERA] menu → [SW MODE] → [FACE DETECT/TRACKING MODE] → [FACE DETECT/TRACKING AE&AF] is set.
- The face detection mode will not operate in following cases:
  - When using enlarged display function in the focus assist function
  - When the IR recording is enabled
  - When the [SCENE FILE] menu → [VFR] → [ON] is set
  - When the [SYSTEM] menu → [SUPER SLOW] → [ON] is set
  - When set to slow shutter
  - When the area mode function or auto focus area width adjustment function is operating
- If the auto focus is not set, it will not go into the tracking mode even if the subject in the LCD monitor is touched.
- The subject cannot be touched during the mirror shooting.

Optical image stabilizer function

Camera shake can be reduced by using the optical image stabilizer function when shooting while holding the camera by hand.
You can use the hybrid optical image stabilizer function.
The hybrid optical image stabilizer function is an optical image stabilizer that combines optical and electronic methods.

Enabling/disabling the optical image stabilizer function

1 Select the [CAMERA] menu → [SW MODE] → [O.I.S.] → [ON].

- You can enable or disable the optical image stabilizer function by pressing the <O.I.S.> button.

Enabling/disabling the hybrid optical image stabilizer function

1 Select the [CAMERA] menu → [SW MODE] → [HYBRID O.I.S.] → [ON].

Enable the hybrid optical image stabilizer function for more powerful image stabilization when holding the camera and shooting a subject far away with zoom.
When the hybrid optical image stabilizer function is enabled, is displayed on the LCD monitor.

Optical image stabilizer settings according to shooting conditions

You can set the optical image stabilizer settings according to the shooting conditions.

1 Select the [CAMERA] menu → [SW MODE] → [O.I.S. MODE] → [NORMAL]/[PAN/TILT]/[STABLE].

[NORMAL]: Specifies the standard setting for a good balance of correction for large and small camera shake.
[PAN/TILT]: Specifies a setting appropriate for shooting that uses a lot of panning and tilting of the camera.
[STABLE]: Specifies a setting appropriate for fixing a composition to shoot a subject.

- Toggles [NORMAL], [PAN/TILT], and [STABLE] in order each time the USER button to which [O.I.S. MODE] is assigned is pressed or the USER button icon is touched.

NOTE

- Stabilization may not be possible when the camera has a large amount of shake.
- When using a tripod, disabling the optical image stabilizer function will allow you to obtain natural images.

Dynamic range stretcher function

By compressing the video signal levels of the high luminosity areas that are blown out in normal shooting while maintaining the contrast, the dynamic range can be expanded.
The knee function, black gamma function, and the gamma mode function do not operate while the dynamic range stretcher function is enabled.

Enabling/disabling the dynamic range stretcher function

1 Select the [SCENE FILE] menu → [DRS] → [ON].

- The dynamic range stretcher function can be enabled or disabled by pressing the USER button to which [DRS] is assigned, or touching the USER button icon.

Setting the dynamic range stretcher effect

1 Select the compression level with the [SCENE FILE] menu → [DRS EFFECT DEPTH].

NOTE

- Dynamic range stretcher function does not operate when the [SYSTEM] menu → [COLOR SETTING] is set to [V-Log].

Time stamp function

You can record the date and time of shooting on the images.

1 Select the information to record in the [RECORDING] menu → [TIME STAMP].

[OFF]: Does not superimpose the date and time.
[DATE]: Superimposes only the date.
[TIME]: Superimposes only the time.
[DATE&TIME]: Superimposes the date and time.
The date and time of recording is displayed in the bottom-center of the LCD monitor.

NOTE

- The order to display the year, month, and day of the time stamp follows the settings in the [OTHERS] menu → [CLOCK] → [DATE FORMAT].
- The display of the month for the time stamp to record on the image is in English.
- The size of the characters and the display position of the time stamp varies depending on the recording format.
- The time stamp is not recorded in the following cases.
  - When the [SYSTEM] menu → [REC FORMAT] → [480-59.94i/AVCHD SA]/[576-50.00i/AVCHD SA] is set
  - When the [SCENE FILE] menu → [VFR] → [ON] is set
  - When the [SYSTEM] menu → [SUPER SLOW] → [ON] is set
  - When the [NETWORK] menu → [NETWORK FUNC] → [STREAMING]/[NDI|HX] is set
  - When the [RECORDING] menu → [PROXY SETTING] → [PROXY REC] → [ON] is set

- When the [SYSTEM] menu → [COLOR SETTING] → [V-Log] is set
- The position to display the time stamp can not be changed.
- The time stamp is displayed even in the screen of the LCD monitor, the image of the viewfinder, and the image output from the <SDI OUT>/<HDMI>/<AV OUT> terminals.
  When the following is set to the [SYSTEM] menu → [REC FORMAT], the time stamp displayed on the video in the LCD monitor screen/viewfinder will have different size of the characters and display position as the recorded time stamp.
  [1080-59.94i/AVC-I50]
  [1080-50.00i/AVC-I50]
  [720-59.94p/AVC-I200]
  [720-59.94p/AVC-I100]
  [720-59.94p/AVC-I50]
  [720-59.94p/AVC-G50]
  [720-59.94p/AVC-G25]
  [720-59.94p/AVC-G12]
  [720-50.00p/AVC-I200]
  [720-50.00p/AVC-I100]
  [720-50.00p/AVC-I50]
  [720-50.00p/AVC-G50]
  [720-50.00p/AVC-G25]
  [720-50.00p/AVC-G12]
  [720-59.94p/AVCHD PM]
  [720-50.00p/AVCHD PM]
- The external output is delayed by one frame when superimposing the time stamp.
- The [VIDEO OUT/LCD/VF] menu → [INDICATOR] → [DATE/TIME] setting is disabled when superimposing the time stamp.
- The time stamp is an image signal recorded superimposed to the subject. Therefore, the peaking display of the focus assist function and zebra pattern detection are enabled also to the time stamp display. The time stamp is also displayed horizontally inverted when set to the [VIDEO OUT/LCD/VF] menu → [LCD] → [SELF SHOOT] → [MIRROR].

Waveform monitor function

Waveform of the image can be displayed.

■ Assigning [WFM] to the USER button

Set this function so that the waveform monitor can be displayed/hidden with an arbitrary USER button.

1 Select the [CAMERA] menu → [USER SW] → [USER1] to [USER12] → [WFM].

- [WFM] is assigned to the <USER 3> button in the factory settings.

■ Displaying the waveform monitor

1 Press the USER button assigned to [WFM] or touch the USER button icon.

Press the USER button or touch the USER button icon again to return to the normal display.

- The display switches each time the USER button is pressed or the USER button icon is touched when the [VIDEO OUT/LCD/VF] menu → [EI ASSIST] → [WFM MODE] → [WAVE/VECTOR] is set.

Setting the displaying of the waveform monitor

Displaying of the waveform and the vector can be switched.

1 Select the display of the waveform monitor in the [VIDEO OUT/LCD/VF] menu → [EI ASSIST] → [WFM MODE].

[WAVE]: Displays the waveform.
[VECTOR]: Displays the vector.
[WAVE/VECTOR]: Displays the waveform and the vector. The waveform, vector or no display toggles in order each time the USER button to which [WFM] is assigned is pressed or the USER button icon is touched.

Setting the transmittance

The transmittance of the waveform monitor can be set.

1 Select the transmittance in the [VIDEO OUT/LCD/VF] menu → [EI ASSIST] → [WFM TRANSPARENCE].

- The transmittance can be selected from [0%], [25%], or [50%].

NOTE

- The waveform monitor cannot be recorded.
- The waveform monitor is not displayed when using enlarged display function in the focus assist function.
- The waveform monitor is automatically displayed when setting some of the menu to perform the image quality adjustment.

Digital zoom function

■ Assigning [D.ZOOM] to the USER button

Set so enable/disable of the digital zoom function can be switched with an arbitrary USER button.

1 Select the [CAMERA] menu → [USER SW] → [USER1] to [USER12] → [D.ZOOM].

■ Using the digital zoom function

1 Press the USER button to which [D.ZOOM] is assigned or touch the USER button icon.

The enlargement rate toggles from 2x, 5x, 10x and disabled in order each time the USER button is pressed or the USER button icon is touched.

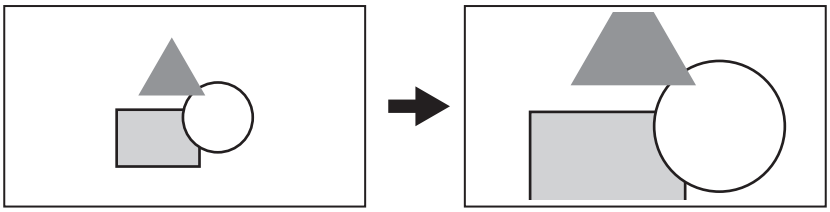

NOTE

- The image quality decreases the higher the enlargement ratio when using the digital zoom.
- The digital zoom is cancelled when the power is turned off.
- The digital zoom cannot be used in following case:
  - When using the face detection/tracking AE&AF function

Level gauge

A level gauge that indicates the horizontal and vertical inclinations of the camera can be displayed on the LCD monitor.

The line of the level gauge is displayed in orange while the camera is inclined. The line of the level gauge will change from orange to light blue, and then to white when the inclination of the camera is corrected. It will indicate up to approximately 30° in horizontal direction, and 30° in vertical direction.

1 Select the [VIDEO OUT/LCD/VF] menu → [LEVEL GAUGE] → [LEVEL GAUGE] → [ON].

NOTE

- The display of level gauge cannot be recorded.
- The level gauge is not displayed when the enlarged display function of the focus assist function is enabled, or when displaying the color bars.
- The level gauge may not display correctly while moving the camera.
- The level gauge may not display correctly when shooting with the camera inclined excessively upward or downward.
- Press the USER button to which [LEVEL GAUGE] is assigned or touch USER button icon to display or hide the level gauge.
- Press the USER button to which [LEVEL GAUGE SET] is assigned or touch the USER button icon to set the current horizontal and vertical directions as the reference value of the level gauge. Restore the set value in the [VIDEO OUT/LCD/VF] menu → [LEVEL GAUGE] → [LEVEL GAUGE RESET].

Color bars

Color bars can be displayed. This is useful for image quality adjustment of a TV or an external monitor.

1 Press the <BARS> button.

Press the <BARS> button again to return to the normal display.

Setting the type of color bars

1 Select the type of color bars in the [OTHERS] menu → [COLOR BARS] → [COLOR BARS TYPE].

- The type of color bars can be selected from [SMPTE] or [FULL].

NOTE

- A smear may occur depending on the output resolution.
- Press the USER button to which [BARS] is assigned or touch the USER button icon to display or hide the color bars.

Setting the audio test signal output

Sets if the audio test signal (tone signal of rating level 1 kHz) can be output or not when the color bars are displayed.

1 Select the [OTHERS] menu → [COLOR BARS] → [TEST TONE] → [ON].

Operation icon screen display

You can select the scene file or execute the functions assigned to [USER8] through [USER12].

Displaying the operation icon screen

1 Press the multidial or the <SET> button while [⚙ ICONS] is displayed in the LCD monitor, or touch the LCD monitor for one second or longer while the camera image screen is displayed.

- The operation icon screen is displayed.
  The camera returns to the camera image screen from the operation icon screen in the following cases.
  - When the <EXIT> button is pressed
  - When anything other than the icon is touched
  - When the touch operation of the LCD monitor and button operation of the <◀◀> button, <■> button, <▶▶> button, <▶/❚❚> button, or <SET> button are not performed for approximately five seconds

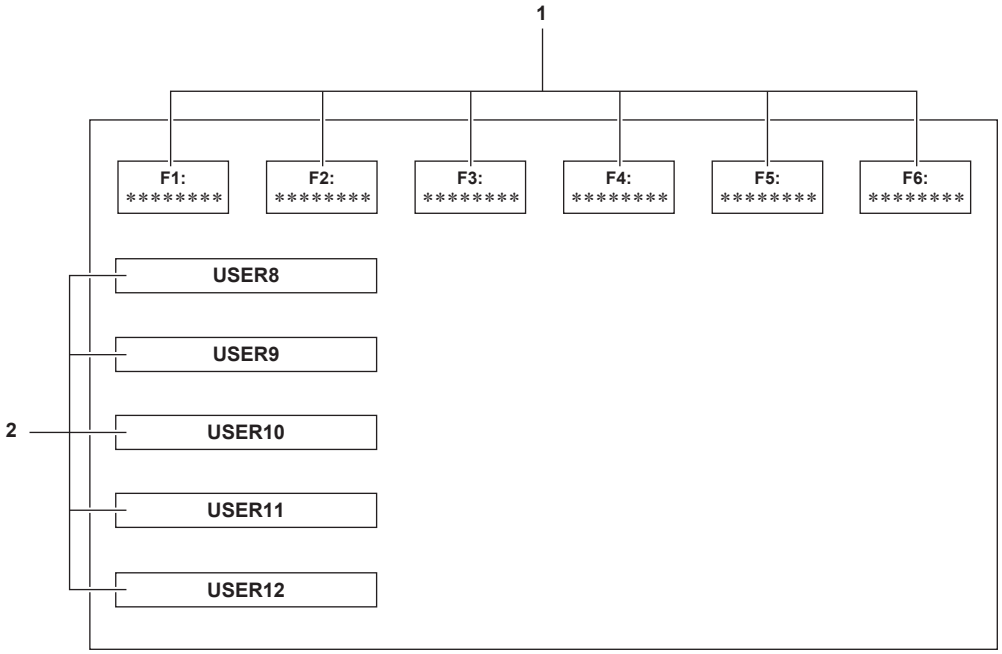

1 Scene file (1 to 6) icon
Align the cursor and press the multidial or the <SET> button, or touch the icon to select each scene file.
The name of each scene file is displayed on the second line of the icon.

2 [USER8] to [USER12] icon
Align the cursor and press the multidial or the <SET> button, or touch the icon to execute the function assigned to [USER8] through [USER12].
Each function assigned to [USER8] through [USER12] is displayed in the icon.

Multi manual function

Operate the multidial to change settings and perform other operations without displaying the menu.
Operations can also be performed by pressing the <▶/❚❚> button, <■> button, <SET> button, and <EXIT> button.
You can execute the following functions.

Display of the camera image screen	Function
[⚙ ICONS]	Displays the operation icon screen.
[⚙ WB]	Sets the variable value for the white balance.
[⚙ SHUTTER]	Sets the shutter speed.
[⚙ SYNCHRO]	Sets the synchro scan shutter speed.
[⚙ FRAME RATE]	Sets the frame rate of the variable frame rate recording function.
[⚙ AREA]	Adjusts the area size/area position of the area mode function.
[⚙ AF AREA]	Adjusts the width of the auto focus area.

Displaying the operation icon screen

1 Turn the multidial to display the [⚙ ICONS].

2 Press the multidial.

The operation icon screen is displayed.

Setting the variable value for the white balance

1 Turn the multidial to display the [⚙ WB].

2 Press the multidial.

The white balance display is highlighted in orange.

3 Turn the multidial to select the color temperature.

4 Press the multidial.

The setting changes to the value displayed and exits.
Press the <EXIT> button to exit without changing the setting.

NOTE

- [⚙ WB] is only displayed when the following conditions are satisfied.
  - The <WHITE BAL> switch is in the <PRST> position
  - The [CAMERA] menu → [SW MODE] → [W.BAL PRESET] is set to [VAR]
  - The auto tracking white balance function is disabled
  - IR recording is disabled

Setting the shutter speed

1 Turn the multidial to display the [⚙ SHUTTER].

2 Press the multidial.

The shutter speed display is highlighted in orange.

3 Turn the multidial to select the shutter speed.

4 Press the multidial.

The setting changes to the value displayed and exits.
The synchro scan settings start when the shutter speed display is a decimal.
Press the <EXIT> button to exit without changing the setting.

NOTE

- [⚙ SHUTTER] is displayed when the shutter function is enabled and set to manual shutter.
- Press the <SHUTTER> button to enable/disable the shutter function.

Setting the synchro scan shutter speed

1 Turn the multidial to display the [⚙ SHUTTER].

2 Press the multidial.

The shutter speed display is highlighted in orange.

3 Turn the multidial to select the shutter speed of the decimal display.

4 Press the multidial.

[SYNCHRO] is displayed.

5 Turn the multidial to select the synchro scan shutter speed.

6 Press the multidial.

The setting changes to the value displayed and ends.
Press the <EXIT> button to exit without changing the setting.

Setting the frame rate of the variable frame rate recording function

1 Turn the multidial to display the [FRAME RATE].

2 Press the multidial.

The frame rate display is highlighted in orange.

3 Turn the multidial to select the frame rate.

4 Press the multidial.

The setting changes to the value displayed and exits.
Press the <EXIT> button to exit without changing the setting.
When the REC button is pressed while it is possible to record, exits from the setting after changing the setting to the displayed value, and then the recording is started.

NOTE

- [FRAME RATE] is displayed when the [SCENE FILE] menu → [VFR] → [ON] and the [SYSTEM] menu → [SUPER SLOW] → [OFF] are set.

Adjusting the area size/area position of the area mode function

1 Turn the multidial to display the [AREA].

2 Press the multidial.

3 Turn the multidial to change the size of the area frame.

4 Press the <◀◀> button, <■> button, <▶▶> button, or <▶/❚❚> button to change the position of the area frame.

5 Press the multidial.

The setting is changed to the displayed size/position and exits.
The setting is changed and exits also by pressing the <EXIT> button.

NOTE

- [AREA] is displayed when the area mode function is enabled.

Adjusting the width of the auto focus area

Adjusts the width of the area that auto focus is enabled according to the size of the subject.

1 Press the USER button assigned to [AF AREA] or touch the USER button icon while the camera image screen is displayed.

[AF AREA] is displayed in the camera image screen.

2 Turn the multidial to adjust the auto focus area frame.

3 Press the multidial.

The setting changes to the width displayed and exits.
Press the <EXIT> button to exit without changing the setting.
To release the setting, press the USER button to which [AF AREA] is assigned or touch the USER button icon.
To adjust the setting again, press the multidial when [AF AREA] is displayed in yellow and perform Steps **2** to **3**.

NOTE

- The width of the auto focus area frame can be adjusted even if the [CAMERA] menu → [SW MODE] → [AF AREA WIDTH] → [ON] is set and the menu is closed.

Chapter 6 Playback

Data including additional information such as image, audio, and meta data that are recorded by single shooting is saved as a clip. Playback, copy, etc., of the clip can be performed on the camera.

Thumbnail operation

Thumbnail operation overview

A clip is a group of data recorded by a single shooting, which includes additional information such as image, audio, and meta data.
The following operations can be performed while viewing the clip thumbnails displayed on the LCD monitor.

- Playback
- Delete
- Protect (only the clips recorded in MOV/AVCHD)
- Copy (only the clips recorded in P2/AVCHD)
- Re-connect (only the clips recorded in P2)
- The two methods of operation are the method to operate with the multidial or the <◀◀> button, <■> button, <▶▶> button and <▶/❚❚> button, or a method to operate by touching the LCD monitor.

Thumbnail screen

Press the <THUMBNAIL> button to display the thumbnail screen while displaying the camera image screen.
Press the <THUMBNAIL> button again to display the camera image screen.
The clips in the recording file format (P2/MOV/AVCHD) selected in the [SYSTEM] menu → [FILE FORMAT] are displayed in the thumbnail screen.
Also, menu in the thumbnail screen can be operated by pressing the <MENU> button while the thumbnail screen is displayed.

1 Clip status display

[ALL SLOT]: Displays all the clips recorded on every memory card in each card slot. Displays in [ALL SLOT] when the thumbnail screen is displayed from the camera image screen.
[SLOT1]: Displays only the clips recorded on the memory card in card slot 1.
[SLOT2]: Displays only the clips recorded on the memory card in card slot 2.
[SLOT1→SLOT2]: Displayed when copying from the memory card in card slot 1 to the memory card in card slot 2.
[SLOT2→SLOT1]: Displayed when copying from the memory card in card slot 2 to the memory card in card slot 1.
[SAME FORMAT]: Displays only the clips recorded in the same format as the system format.
Clips recorded in the same format match the current settings for each item of the [SYSTEM] menu → [FREQUENCY]/[FILE FORMAT]/[REC FORMAT]/[AUDIO SAMPLE RES.].
[MARKED]: Only the clips with shot mark are displayed.

2 Function display

This is displayed during the operation of copy, delete, protect, etc.

3 Recording mode

P2: Displayed when P2 is selected as the recording file format.
MOV: Displayed when MOV is selected as the recording file format.
AVCHD: Displayed when AVCHD is selected as the recording file format.
P2: Displayed when MOV or AVCHD is selected as the recording file format and there is at least one P2 clip on any of the memory cards.
AVCHD: Displayed when P2 or MOV is selected as the recording file format and there is at least one AVCHD clip on any of the memory cards.
MOV: Displayed when P2 or AVCHD is selected as the recording file format and there is at least one MOV clip on any of the memory cards.

4 Defective clip status

NG: Displayed when P2 is selected as the recording file format and there is at least one defective P2 clip that may be repaired in the thumbnail screen.
NG: Displayed when P2 is selected as the recording file format and there is at least one defective P2 clip that cannot be repaired in the thumbnail screen.
(No display): There is no defective P2 clip in the thumbnail screen.

5 Media status display

The card slot number of the memory card where the clip in the cursor position is recorded is displayed in yellow.

6 Upload status display
Displays the status of the contents upload.
: Displayed in gray when the upload has not started or when the upload has completed.
: Displayed in yellow when the upload is in progress.
: Displayed when an upload error has occurred.

7 Connection status display of the wired LAN, wireless LAN, and USB tethering
Displays the connection status of the wired LAN, wireless LAN, and USB tethering.
(No display): Not connected via wired LAN, wireless LAN, or USB tethering. It is set to the [NETWORK] menu → [DEVICE SEL] → [OFF].
: It is set to the wired LAN, and ROP is not connected.
: It is set to the wired LAN, and ROP is connected.
: It is set to the wireless LAN, and ROP is not connected.
: It is set to the wireless LAN, and ROP is connected.
: It is set to the USB tethering, and ROP is not connected.
: It is set to the USB tethering, and ROP is connected.

8 Power status display
: Displays the remaining battery level while powered with the battery.
: Displayed when powered with the AC adaptor.

9 Cursor

10 Clip that cannot be played back
Displays when the clip cannot be played back in the camera such as standard violation.

11 Page switching button
Switches the page of the thumbnail screen.
[△]: Moves to previous page
[▽]: Moves to next page

12 Scroll bar
Indicates which part of the whole thumbnail is currently being viewed.

NOTE

- When P2 is selected as the recording file format, a clip recorded over multiple memory cards is displayed as one clip.

Display of the clips in the thumbnail screen

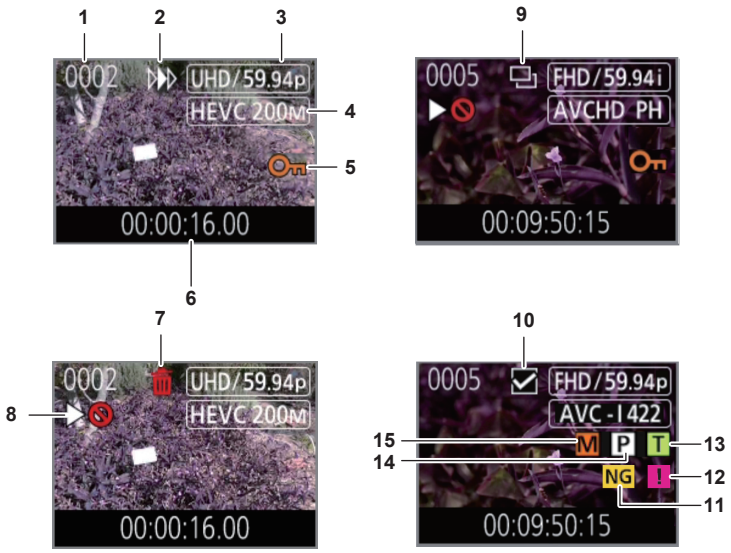

1 Thumbnail number
Displays the thumbnail number in [0001] to [9999].
Normally, the number assigned to the clip in the order of recording is displayed.

2 Resume play status

3 Number of recording pixels, system frequency

4 Recording file format, recording codec

5 Protection status of the clip
This is displayed when the clip is protected.

6 Standard time code/clip name
The first eight digits for the time code when starting shooting of a clip or the file name of the clip are displayed in alphanumeric.
The information to display is set in the [THUMBNAIL] menu → [DISPLAY] → [DATA].

7 Delete selection status

8 Clip that cannot be played back
This is displayed when the clip cannot be played back with the camera because the system frequency is different, etc.

9 Copy selection status
This is displayed when the clip is selected.

10 Re-connection selection status
This is displayed when the clip to be re-connected is selected.

11 Defective clip/unknown clip
NG: This is displayed for a defective P2 clip that may be repaired.
NG: This is displayed for a defective P2 clip that cannot be repaired.
?: This is displayed for a P2 clip with a different format for P2 standard.

12 Incomplete clip
!: This is displayed for a P2 clip when the clip is recorded over multiple memory cards, and any of those memory cards are not inserted.

13 Clip with text memo
T: This is displayed on the clip with a text memo data.

14 Clip with proxy
P: This is displayed on the clip with a proxy recorded.

15 Clip with shot mark
M: This is displayed on the clip with a shot mark attached. For details, refer to “Shot mark recording function” (page 147).

Display of clip information

Displays the information of the clip where the cursor is positioned.

1 Move the yellow cursor to the clip to display the clip information.

2 Select the [THUMBNAIL] menu → [CLIP] → [INFORMATION].

The clip information is displayed.

■ Clip information

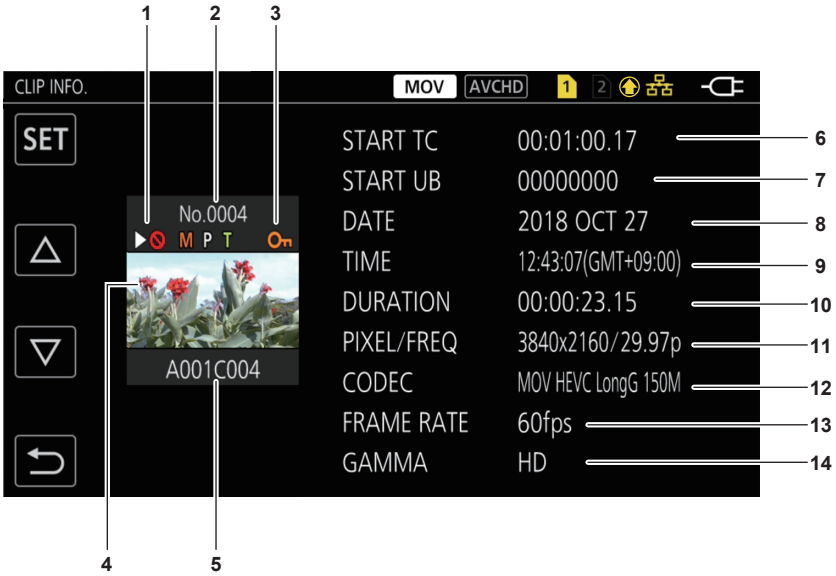

1 Clip that cannot be played back
This is displayed when the clip cannot be played back with the camera because the system frequency is different, etc.

2 Thumbnail number

3 Protection status of the clip/defective clip/unknown clip/incomplete clip/shot mark/proxy/text memo

: This is displayed when the clip is protected.
NG: This is displayed for a defective P2 clip that may be repaired.
NG: This is displayed for a defective P2 clip that cannot be repaired.
?: This is displayed for a P2 clip with a different format for P2 standard.
!: This is displayed for a P2 clip when the clip is recorded over multiple memory cards, and any of those memory cards are not inserted.
M: This is displayed on the clip with a shot mark attached. For details, refer to “Shot mark recording function” (page 147).
P: This is displayed on the clip with a proxy recorded.
T: This is displayed on the clip with a text memo data.

4 Thumbnail image

5 Clip name

6 [START TC]
Displays the time code value at the start of the recording.

7 [START UB]
Displays the user bits value at the start of the recording.

8 [DATE]
Displays the date of the recording.

9 [TIME]
Displays the time at the start of recording.

10 [DURATION]
Displays the time length of the clip.

11 [PIXEL/FREQ]
Displays the recording format of the clip.

12 [CODEC]/[CODEC/AUDIO]

Displays the recording file format and the recording codec of the clip.
Displays the number of bits of the audio of the clip when recording format is AVC-Intra 100/AVC-Intra 50.

13 [FRAME RATE]

Displays the recording frame rate of the clip.
Displays when the variable frame rate recording function is enabled and the clip is recorded in a frame rate different from the system frequency.

14 [GAMMA]

Displays the gamma of the clip.
Displays [V-Log] when the [SYSTEM] menu → [COLOR SETTING] → [V-Log] is set and recording is performed.
Displays when the [SYSTEM] menu → [FILE FORMAT] → [P2]/[MOV] is set and recording is performed..

Displaying the clip metadata

Displays the metadata recorded in the clip where the cursor is positioned.

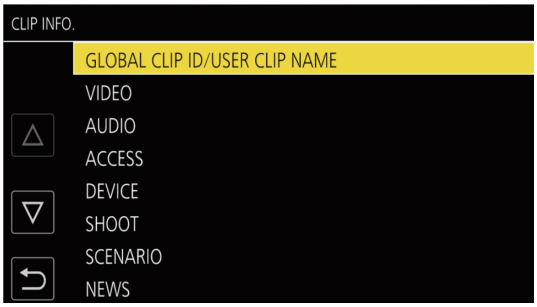

Fig. 1

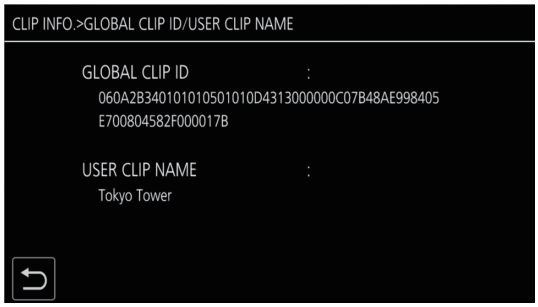

Fig. 2

1 Move the yellow cursor to the clip to display the clip information.

2 Select the [THUMBNAIL] menu → [CLIP] → [INFORMATION].

The clip information is displayed.

3 Select [SET].

The clip meta item screen is displayed. (Fig. 1)
The clip meta details screen is displayed by selecting the clip meta item to display. (Fig. 2)

Copying clips

Clips can be copied between memory cards.
Only the clip recorded in P2 or AVCHD can be copied.

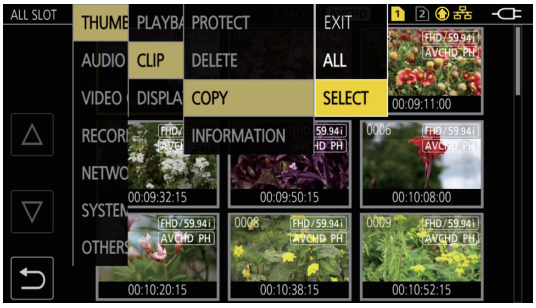

Fig. 1

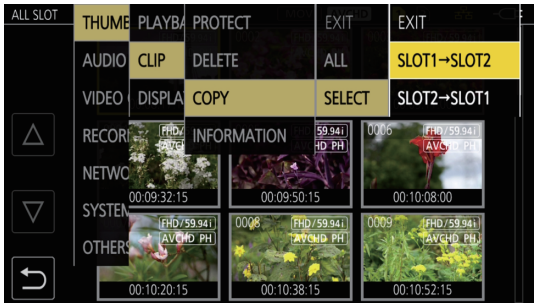

Fig. 2

Fig. 3

Fig. 4

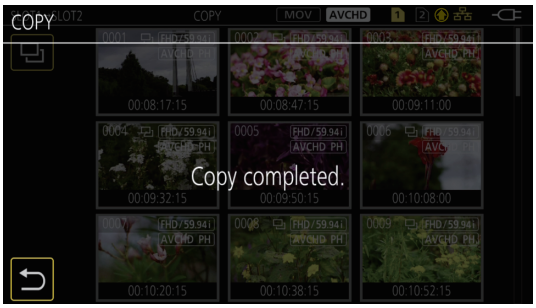

Fig. 5

1 Press the <THUMBNAIL> button.

The thumbnail screen is displayed.

2 Press the <MENU> button while the thumbnail screen is displayed.

The menu is displayed.

3 Select the [THUMBNAIL] menu → [CLIP] → [COPY].

4 Select [SELECT]. (Fig. 1)

- Selecting [ALL] copies all the clips between the memory cards.

5 Select the card slot for the copy destination. (Fig. 2)

The clips on the memory card of the copy source is displayed in the thumbnail screen. (Fig. 3)

- **[SLOT1→SLOT2]:** Copies clips from the memory card in card slot 1 to the memory card in card slot 2.
- **[SLOT2→SLOT1]:** Copies clips from the memory card in card slot 2 to the memory card in card slot 1.

6 Select the clip to copy in the thumbnail screen.

is displayed on the selected clip.

7 Select . (Fig. 4)

- This can also be selected by pressing and holding the multidial.

8 When the confirmation message is displayed, select [SET].

Progress bar is displayed, and the copy of the clip starts.
[OVERWRITE?] is displayed when there is a same P2 clip in the copy destination. Select [SET] when overwriting the clip, and select when not overwriting the clip.

- To cancel the copy midway, select [CANCEL].

9 When the completion message is displayed, select ⮌. (Fig. 5)

NOTE

- The clip whose recording file format is MOV cannot be copied.
- The copy is not possible when the volume of the selected clip is larger than the available card capacity of the destination.
- It cannot copy when the copy destination card is write protected.
- The copy is not possible when the maximum number of the clips will exceed.
- The copy is not possible when the maximum number of the playlist will exceed.
- The P2 clip exceeding 4 GB cannot be copied to a memory card of 32 GB or less.
- The P2 clip recorded over multiple memory cards cannot be copied to a same memory card.

Deleting clips

Deletes the clip.

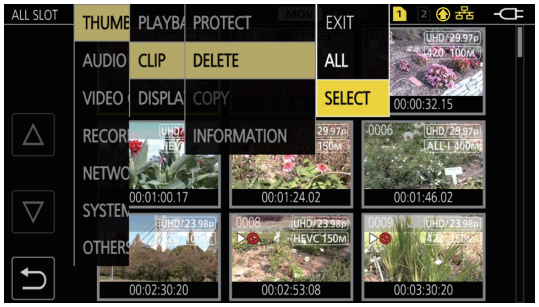

Fig. 1

Fig. 2

Fig. 3

1 Press the <THUMBNAIL> button.

The thumbnail screen is displayed.

2 Press the <MENU> button while the thumbnail screen is displayed.

The menu is displayed.

3 Select the [THUMBNAIL] menu → [CLIP] → [DELETE].

4 Select [SELECT]. (Fig. 1)

The thumbnail screen is displayed. (Fig. 2)

- When [ALL] is selected, all the clips displayed in the thumbnail screen are deleted.
  The clip that is not displayed in the thumbnail screen is not deleted.

5 Select the clip to delete in the thumbnail screen.

🗑 is displayed on the selected clip.

6 Select [DEL]. (Fig. 3)

- This can also be selected by pressing and holding the multidial.

7 When the confirmation message is displayed, select [SET].

Progress bar is displayed, and the deleting of the clip starts.

- To cancel midway, select [CANCEL].

8 When the completion message is displayed, select ⮌.

NOTE

- The protected clip cannot be deleted.
- It cannot delete when the card with the clip to delete is write protected.
- The clip can be deleted even if the contents upload function is operating, but the upload may not have completed.

Protecting clips

The clip recorded in MOV or AVCHD can be protected.

1 Press the <THUMBNAIL> button.

The thumbnail screen is displayed.

2 Press the <MENU> button while the thumbnail screen is displayed.

The menu is displayed.

3 Select the [THUMBNAIL] menu → [CLIP] → [PROTECT].

4 Select [SELECT].

The thumbnail screen is displayed.

5 Select the clip to protect in the thumbnail screen.

is displayed on the selected clip.

- Protect is canceled when the protected clip is selected.

NOTE

- It cannot protect when the card with the clip to protect is write protected.
- The clip whose recording file format is P2 cannot be protected.

Adding shot mark to a clip

This camera can add a shot mark to the thumbnail of a clip to distinguish from other clips.

■ Assigning [SHOT MARK] to the USER button

1 Select the [CAMERA] menu → [USER SW] → [USER1] to [USER12] → [SHOT MARK].

■ Adding shot mark to the thumbnail of a clip

1 Press the <THUMBNAIL> button.

The thumbnail screen is displayed.

2 Move the yellow cursor to the clip to add a shot mark.

3 Press the USER button assigned with [SHOT MARK].

A shot mark M is added to the thumbnail of the clip where the cursor is.

- To delete a shot mark, move the cursor to it again and press the USER button assigned with [SHOT MARK].

NOTE

- Shot mark can be added/cleared only on the clips in P2 format.
- The shot mark can also be added while recording.
  By adding a shot mark after stopping the recording, a shot mark can be added to the clip recorded immediately before that.
  For details, refer to “Shot mark recording function” (page 147).
- When adding/clearing a shot mark on a clip spanning across multiple memory cards, it is necessary to insert all the memory cards with that clip recorded into the card slots.

Restoring clips

In following cases, restoration of the clip may be required depending on the condition. It may take some time to restore depending on the error.

- When the memory card in the card slot that is flashing is removed while the card 1 access lamp or the card 2 access lamp is flashing
- When the power is turned off by removing the battery or the AC adaptor while recording or performing record completion process

Restoring a clip (MOV format/AVCHD format)

An error as in following figure is displayed when MOV or AVCHD is selected as the recording file format.

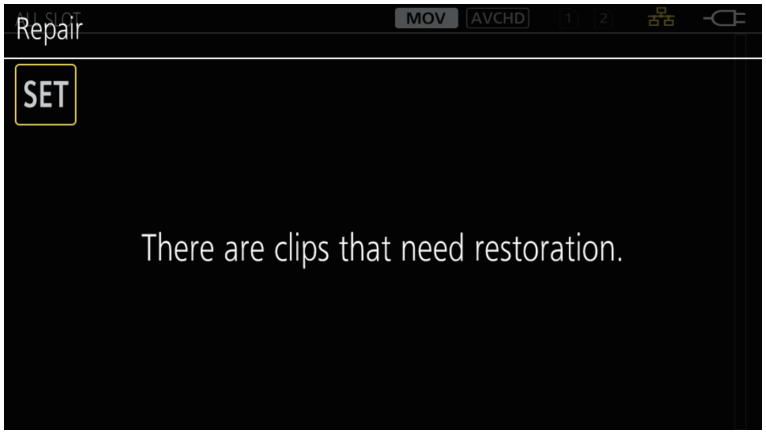

Fig. 1

1 Select [SET] in the error message screen. (Fig. 1)

- Once the repair is completed, select ↩ in the confirmation message. It will return to the previous screen.
- [!] is displayed on the clip when an abnormal management information is detected while displaying the thumbnail.

Restoring a clip (P2 format)

An error message is not displayed when P2 is selected as the recording file format.

NG is displayed in the thumbnail screen when there is at least one defective P2 clip that may be repaired in the thumbnail screen. In such case, the clip can be repaired in following procedure.

1 Press the <THUMBNAIL> button.

The thumbnail screen is displayed.

2 Press the <MENU> button while the thumbnail screen is displayed.

The menu is displayed.

3 Select the [THUMBNAIL] menu → [CLIP] → [REPAIR].

4 Select [YES].

All the defective P2 clips that may be repaired in the thumbnail screen are repaired.

NOTE

- Do not remove the memory card in the card slot that is flashing, or do not remove the battery or the AC adaptor when the card 1 access lamp/card 2 access lamp is flashing in orange. Doing so will cause damage to the memory card.
- Use a sufficiently charged battery or AC adaptor.
- It may not be possible to completely repair depending on the condition of the data.
- To restore the clips, it is necessary that the clips are recorded for more than a certain amount of time. Especially in the following cases, the clips may not be restored, because the number of frames to be recorded is small.
  - When the variable frame rate recording function is enabled, and the frame rate lower than the system frequency is set.
  - When the interval recording function is enabled.
- The clips shot before the power was turned off will not be able playback if the repair fails.
  Also, it may not be possible to record any more.
- If data recorded with other device is repaired, it may not be able to play back on the camera or other device.
- If the repair failed, turn off the camera, and turn it back on after waiting for a while. If the repair fails repeatedly, format with the camera. All data will be erased when it is formatted, and it cannot be restored.
- Display of the thumbnail become slower when the thumbnail information is repaired.
- The proxy data is deleted when a defective clip including a proxy data in P2 format is restored.

Linking the incomplete clips

The linked P2 clips recorded over multiple memory cards may become incomplete clips due to being copied separately from each memory card.

These can be restored to original linked clips by using the link function.

Only the P2 clips can be linked.

1 Press the <THUMBNAIL> button.

The thumbnail screen is displayed.

2 Press the <MENU> button while the thumbnail screen is displayed.

The menu is displayed.

3 Select the [THUMBNAIL] menu → [CLIP] → [RE-CONNECT].

4 Select [SELECT].

The thumbnail screen is displayed.

5 Select the clip to link in the thumbnail screen.

☑ is displayed next to the thumbnail number on the selected clip.

6 Select [SET].

- This can also be selected by pressing and holding the multidial.

7 Select [SET] when the confirmation message is displayed.

This starts linking of the clip.

8 When the completion message is displayed, select ↩.

NOTE

- Even though some clips are reconnected, 1 will remain displayed when all the clips constituting the original linked clip are not present.
- Linking is not possible when the card with the clips to link is write-protected.

Playing back clips

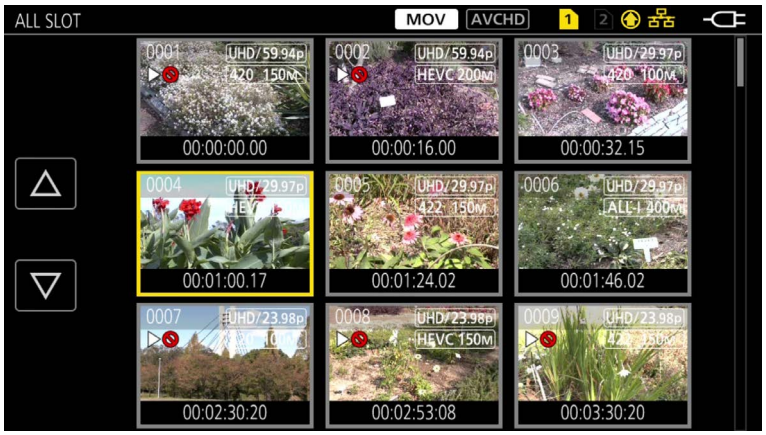

1 In the [SYSTEM] menu → [FREQUENCY], select the system frequency to play back.

2 In the [SYSTEM] menu → [FILE FORMAT], select the file format to play back.

3 In the [SYSTEM] menu → [REC FORMAT], select the signal format and codec mode to play back.

4 Press the <THUMBNAIL> button.

The thumbnail screen is displayed.

5 Press the <MENU> button while the thumbnail screen is displayed.

The menu is displayed.

6 In the [THUMBNAIL] menu → [PLAYBACK] → [CLIP SEL], select the card slot of the memory card to play back.

[ALL SLOT]: Displays all the clips recorded on every memory card in each card slot.
Displays in the order of the clips in card slot 1, and then clips in the card slot 2 when MOV or AVCHD is selected as the recording file format.
Displays the clips in all the card slots in the order of the recording date and time when P2 is selected as the recording file format.
[SLOT1]: Displays only the clips recorded on the memory card in card slot 1.
[SLOT2]: Displays only the clips recorded on the memory card in card slot 2.
[SAME FORMAT]: Displays only the clips recorded in the same format as the system format.
Clips recorded in the same format match the current settings for each item of the [SYSTEM] menu → [FREQUENCY]/[FILE FORMAT]/[REC FORMAT]/[AUDIO SAMPLE RES.].

7 Select the clip to play back.

- ▷⃠ is displayed on the clip that cannot be played back.
- To play back the clip with ▷⃠ displayed, check the information of the clip with the clip information, and try operating from the beginning again.

Playback from button operations and operation icons

Direct playback bar

Playback operation	Operating procedure
Playback/pause	Touch ▶/❚❚ or press the <▶/❚❚> button.
Fast-reverse playback	Touch ◀◀ or press the <◀◀> button. Touch twice to increase the speed.
Fast-forward playback	Touch ▶▶ or press the <▶▶> button. Touch twice to increase the speed.
Stop (return to thumbnail screen)	Touch ■ or press the <■> button.
Skip playback (cue up of the clip)	Touch the LCD monitor while playing back, and slide from right to left (left to right). When sliding from left to right, the clip skips to the beginning of the previous clip if the current playback position of the clip is at less than three seconds from the beginning. The clip skips to the beginning of the current clip if the current playback position of the clip is at three seconds or more from the beginning. Skip playback is also possible by pressing the <▶▶> button or <◀◀> button while paused.
Slow playback	Touch and hold ❚❚▶ or press and hold <+> of the <AUDIO MON/ADV> button while paused. (◀❚❚ or <–> of the <AUDIO MON/ADV> button for reverse slow playback) Touch ❚❚▶ or press and hold the <+> of the <AUDIO MON/ADV> button for continuous frame-by-frame playback. • Touch ▶/❚❚ or press the <▶/❚❚> button to return to normal playback. • The frame-by-frame interval and the display time for each frame for the reverse slow playback differ depending on the type of the clip.
Frame-by-frame playback	Touch ❚❚▶ or press <+> of the <AUDIO MON/ADV> button while paused. (◀❚❚ or <–> of the <AUDIO MON/ADV> button for reverse frame-by-frame playback) • Touch ▶/❚❚ or press the <▶/❚❚> button to return to normal playback. • The frame-by-frame interval for reverse frame-by-frame playback differs depending on the type of the clip.
Direct playback	Touch the direct playback bar, or slide it while touching. • The playback video is paused during the operation. Playback is started by releasing the finger.

NOTE

- Operations of the camera or some performance may become slow for the clip with large file size.
- Operations of the camera or some performance may become slow when there are large number of clips on the memory card.
- Playback will stop once by switching the card slot when MOV or AVCHD is selected as the recording file format, and the [THUMBNAIL] menu → [PLAYBACK] → [CLIP SEL] → [ALL SLOT]/[SAME FORMAT] is set, and then the clips of all the memory cards are displayed. Playback is not possible across two memory cards.
- If selecting P2 as recording file format and playing back a clip that was recorded over two memory cards by relay recording, playback will pause and a black screen will be displayed when switching the card slot. Playback will automatically restart after the switch.
- Playback stops when the memory card is removed during playback.
- During playback of a clip, playback may be suspended or black screen may be displayed due to switching of a clip.

Useful playback function

Resume play

When the playback of a clip is stopped midway, it will start the playback from the position that stopped the playback when it is played back the next time.

1 Select the [THUMBNAIL] menu → [PLAYBACK] → [RESUME PLAY] → [ON].

When the playback of a clip is stopped midway, [▷▶▷] is displayed on the clip in the thumbnail screen.

NOTE

- Resume playback is canceled in following cases.
  - When the power is turned off
  - When the thumbnail screen is canceled by pressing the <THUMBNAIL> button
  - When the [SYSTEM] menu → [REC FORMAT] is changed

Still image recording function

One frame of the recorded video can be recorded as a still image.
Number of pixels of the still image to be recorded is same as the number of pixels of the recorded video.

1 Select by touching 📷 or pressing the multidial at the scene to be recorded as a still image while playing back.

The still image is recorded in the memory card being played back.

NOTE

- The playback will pause when a still image is recorded.
- Recorded still image cannot be displayed in thumbnail, played back, copied, or deleted in the camera.
- [INVALID] is displayed when the still image cannot be recorded in cases such as there is not enough remaining recording capacity in the memory card.
- Still image cannot be recorded for the clip recorded by setting the [SYSTEM] menu → [REC FORMAT] to [480-59.94i/AVCHD SA] or [576-50.00i/AVCHD SA].

Chapter 7 Output and Screen Display

This chapter describes the screen displayed on the output video and LCD monitor.

Output format

The format to be output differs depending on the setting in the [SYSTEM] menu → [FREQUENCY]/[REC FORMAT].

Format that can be output from the <SDI OUT> terminal

The format that can be output from the <SDI OUT> terminal differs with following combination of the settings.

- [SYSTEM] menu → [FREQUENCY]
- [SYSTEM] menu → [REC FORMAT]
- [VIDEO OUT/LCD/VF] menu → [SDI OUT] → [OUT FORMAT]

Item			Output Format [OUT FORMAT]
[FREQUENCY]	[REC FORMAT]		
	Resolution	Frequency	
[59.94Hz]	3840×2160	59.94p	1920×1080 59.94p 1920×1080 59.94i (Factory setting)
		29.97p	1920×1080 29.97PsF
		23.98p	1920×1080 23.98PsF
	1920×1080	59.94p	1920×1080 59.94p 1920×1080 59.94i (Factory setting) 720×480 59.94i
		59.94i	1920×1080 59.94i (Factory setting) 720×480 59.94i
		29.97p	1920×1080 29.97PsF (Factory setting) 720×480 59.94i
		23.98p	1920×1080 23.98PsF (Factory setting) 720×480 59.94i
	1280×720	59.94p	1280×720 59.94p (Factory setting) 720×480 59.94i
	720×480	59.94i	720×480 59.94i
[50.00Hz]	3840×2160	50.00p	1920×1080 50.00p 1920×1080 50.00i (Factory setting)
		25.00p	1920×1080 25.00PsF
	1920×1080	50.00p	1920×1080 50.00p 1920×1080 50.00i (Factory setting) 720×576 50.00i
		50.00i	1920×1080 50.00i (Factory setting) 720×576 50.00i
		25.00p	1920×1080 25.00PsF (Factory setting) 720×576 50.00i
	1280×720	50.00p	1280×720 50.00p (Factory setting) 720×576 50.00i
	720×576	50.00i	720×576 50.00i

NOTE

- The 3840×2160 output is not supported.
- [OUT FORMAT] restores the factory settings when the settings of [FREQUENCY] and [REC FORMAT] change and the current setting values of [OUT FORMAT] cannot be acquired.
- The output format when playing back from the thumbnail screen is as follows.
  - It will be the value set in [OUT FORMAT] when the recording resolution of the playback clip is the same as [REC FORMAT].
  - It will be factory setting of [OUT FORMAT] when the recording resolution of the playback clip is different from [REC FORMAT].

Format that can be output from the <HDMI> terminal

The format that can be output from the <HDMI> terminal differs with following combination of the settings.

- [SYSTEM] menu → [FREQUENCY]
- [SYSTEM] menu → [REC FORMAT]
- [VIDEO OUT/LCD/VF] menu → [HDMI OUT] → [OUT FORMAT]

Item			Output format [OUT FORMAT]
[FREQUENCY]	[REC FORMAT]		
	Resolution	Frequency	
[59.94Hz]	3840×2160	59.94p	3840×2160 59.94p 3840×2160 59.94p (4:2:0/8-bit) 1920×1080 59.94p (Factory setting) 1920×1080 59.94i
		29.97p	3840×2160 29.97p 1920×1080 29.97p (Factory setting)
		23.98p	3840×2160 23.98p 1920×1080 23.98p (Factory setting)
	1920×1080	59.94p	1920×1080 59.94p (Factory setting) 1920×1080 59.94i

Item			Output format [OUT FORMAT]
[FREQUENCY]	[REC FORMAT]		
	Resolution	Frequency	
		59.94i	1920×1080 59.94i
		29.97p	1920×1080 29.97p
		23.98p	1920×1080 23.98p
	1280×720	59.94p	1280×720 59.94p
	720×480	59.94i	720×480 59.94p
[50.00Hz]	3840×2160	50.00p	3840×2160 50.00p 3840×2160 50.00p (4:2:0/8-bit) 1920×1080 50.00p (Factory setting) 1920×1080 50.00i
		25.00p	3840×2160 25.00p 1920×1080 25.00p (Factory setting)
	1920×1080	50.00p	1920×1080 50.00p (Factory setting) 1920×1080 50.00i
		50.00i	1920×1080 50.00i
		25.00p	1920×1080 25.00p
	1280×720	50.00p	1280×720 50.00p
	720×576	50.00i	720×576 50.00p

NOTE

- The audio output from the <HDMI> terminal is two channels or four channels. The audio channel to output can be selected in the [AUDIO] menu → [OUTPUT SETTINGS] → [HDMI OUT CH].
- [OUT FORMAT] restores the factory settings when the settings of [FREQUENCY] and [REC FORMAT] change and the current setting values of [OUT FORMAT] cannot be acquired.
- The output format when playing back from the thumbnail screen is as follows.
  - It will be the value set in [OUT FORMAT] when the recording resolution of the playback clip is the same as [REC FORMAT].
  - It will be factory setting of [OUT FORMAT] when the recording resolution of the playback clip is different from [REC FORMAT].

Screen status display

Screen display during shooting

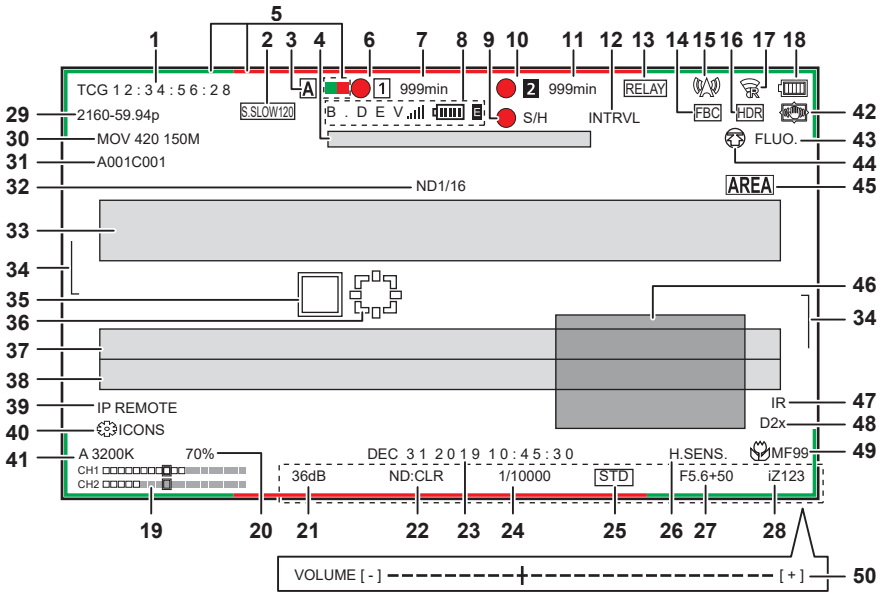

1 Time code

The display will toggle to the next display or no display every time the <COUNTER> button is pressed.

- **[TCG ∗∗:∗∗:∗∗:∗∗]:** Displays the time code. [TCR ∗∗:∗∗:∗∗:∗∗] will be displayed during playback.
  [TCG] is displayed with black and white inverted during the slave lock into the external input time code.
- **[UBG ∗∗ ∗∗ ∗∗ ∗∗]:** Displays the user bits. [UBR ∗∗ ∗∗ ∗∗ ∗∗] will be displayed during playback.
- **[CLIP ∗:∗∗:∗∗:∗∗]:** Displays the counter value of each clip. This is displayed when the [RECORDING] menu → [REC COUNTER] is set to [CLIP]. Displays the counter value of the clip being played back during playback.
- **[∗:∗∗:∗∗:∗∗]:** Displays the cumulative counter value from the reset position. This is displayed when the [RECORDING] menu → [REC COUNTER] → [TOTAL] is set.

2 Frame rate

- **[∗∗fps]:** Frame rate is displayed when set to the [SCENE FILE] menu → [VFR] → [ON].
- **[S.SLOW120]:** Displayed when set to the [SYSTEM] menu → [SUPER SLOW] → [ON] and the [SYSTEM] menu → [FREQUENCY] → [59.94Hz].
- **[S.SLOW100]:** Displayed when set to the [SYSTEM] menu → [SUPER SLOW] → [ON] and the [SYSTEM] menu → [FREQUENCY] → [50.00Hz].
- **(No display):** It is not displayed when set to the [SCENE FILE] menu → [VFR] → [OFF] and the [SYSTEM] menu → [SUPER SLOW] → [OFF].

3 <AUTO/MANUAL> switch

Displayed when the <AUTO/MANUAL> switch is set to <AUTO>.

4 Message display area for stop of cooling fan

Displays a message when the cooling fan has stopped.

5 Tally lamp command status via the network

- **■—:** Displayed when the tally lamp is commanded to illuminate in green via network.
- **■—:** Displayed when the tally lamp is commanded to illuminate in red via network.

6 Recording status (card slot 1)

Displays the recording status of the memory card in card slot 1.

- **1:** Not target for recording.
- **1 (flashing):** Recognizing the memory card.
- 1: The recording is stopped while the recording target memory card is inserted.
- ● 1: Recording.
- ● 1 **(Flashing red dot):** Processing to stop the recording.
- **[P1]:** Recording is stopped with pre-recording is enabled and the recording target memory card is inserted.
- **[P]:** Pre-recording is enabled, and the memory card is not inserted in the card slot, or the memory card is not recognized.
- **(No display):** It is in one of the following conditions.
  - A memory card has not been inserted.
  - The memory card cannot be recognized.
  - It is set to the [NETWORK] menu → [NETWORK FUNC] → [NDI|HX].

7 Remaining recording capacity and status of the memory card (card slot 1)

Displays the remaining recording capacity and status of the memory card in card slot 1.

- **[0min] to [999min]:** Remaining recording capacity (999 minutes or more is displayed as [999min])
  - The display will flash when the remaining recording capacity becomes two minutes or less.
  - The recording capacity available for simultaneous recording (recording capacity for the memory card of the two memory cards with less recording capacity) is displayed when simultaneous recording is performed.
- **[WP]:** Write protected (the write protection switch of the memory card is set to the LOCK side)
- **[END]:** No remaining recording capacity (no remaining recording capacity on the memory card)

- **[ERR]:** A memory card that cannot record is inserted (the card is recognized but cannot record due to a format error, a card other than a memory card being inserted, etc.)
- **[!SDXC]:** The SDXC memory card is not inserted for MOV recording
- **(No display):** It is in one of the following conditions.
  - A memory card has not been inserted.
  - The memory card cannot be recognized.
  - The [NETWORK] menu → [NETWORK FUNC] → [NDI|HX] is set.

8 Bonding Device Status

Displays the device status received from the bonding device with up to first five letters and the following symbol.

- **:** The signal reception strength of the bonding device is displayed in 6 levels.
- **:** The remaining battery of the bonding device is displayed in 6 levels.
- **E:** Displayed when there is an error in the bonding device.
- **(No display):** Bonding device is not connected.

9 External equipment recording operation control status (<SDI OUT>/<HDMI> terminal)

Displays the control status of the recording start and recording stop on the external equipment connected to the <SDI OUT> terminal and the <HDMI> terminal.

- **[●S/H]:** Recording instruction is output to the output from the <SDI OUT> terminal and <HDMI> terminal.
- **[S/H]:** Pause instruction is output to the output from the <SDI OUT> terminal and <HDMI> terminal.
- **[●SDI]:** Recording instruction is output to the output from the <SDI OUT> terminal.
- **[SDI]:** Pause instruction is output to the output from the <SDI OUT> terminal.
- **[●HDMI]:** Recording instruction is output to the output from the <HDMI> terminal.
- **[HDMI]:** Pause instruction is output to the output from the <HDMI> terminal.

10 Recording status (card slot 2)

Displays the recording status of the memory card in card slot 2.

- **2:** Not target for recording.
- **2 (flashing):** Recognizing the memory card.
- **2:** The recording is stopped while the recording target memory card is inserted.
- **● 2:** Recording.
- **● 2 (Flashing red dot):** Processing to stop the recording.
- **[P2]:** Recording is stopped with pre-recording is enabled and the recording target memory card is inserted.
- **(No display):** It is in one of the following conditions.
  - A memory card has not been inserted.
  - The memory card cannot be recognized.
  - The [NETWORK] menu → [NETWORK FUNC] → [NDI|HX] is set.

11 Remaining recording capacity and status of the memory card (card slot 2)

Displays the remaining recording capacity and status of the memory card in card slot 2.

- **[0min] to [999min]:** Remaining recording capacity (999 minutes or more is displayed as [999min])
  - The display will flash when the remaining recording capacity becomes two minutes or less.
  - The recording capacity available for simultaneous recording (recording capacity for the memory card of the two memory cards with less recording capacity) is displayed when simultaneous recording is performed.
- **[WP]:** Write protected (the write protection switch of the memory card is set to the LOCK side)
- **[END]:** No remaining recording capacity (no remaining recording capacity on the memory card)
- **[ERR]:** A memory card that cannot record is inserted (the card is recognized but cannot record due to a format error, a card other than a memory card being inserted, etc.)
- **[!SDXC]:** The SDXC memory card is not inserted for MOV recording
- **(No display):** It is in one of the following conditions.
  - A memory card has not been inserted.
  - The memory card cannot be recognized.
  - The [NETWORK] menu → [NETWORK FUNC] → [NDI|HX] is set.

12 Special recording function

Displays the status of special recording function.

- **[INTRVL]:** The interval recording is stopped.
- **[I-REC]:** The interval recording is in progress. (Displayed in red)

13 Two-slot function

Displays the setting status of the recording function using two memory cards.
It is displayed with a slanted line if it is in a condition that cannot perform two-slot recording even if each function is enabled.

- **[RELAY]:** When the relay recording is enabled
- **[SIMUL]:** When the simultaneous recording is enabled
- **[BACKGR]:** When the background recording is enabled
- **(No display):** During standard recording (when set to the [NETWORK] menu → [NETWORK FUNC] → [NDI|HX], [NDI|HX] is displayed)

14 Flash band compensation function

- **[FBC]:** Displayed when the flash band compensation function is operating.

15 Streaming status

Displays the streaming status.

- **:** When the camera is connected to a device to receive the streaming video, and the streaming video is distributed
- **(flashing):** When the camera is being connected to a device to receive the streaming video
- **:** When the streaming function is enabled, it is in condition to operate properly, and the streaming video is not distributed
- **:** When there is an error in the streaming function and cannot operate

- **(No display):** When the streaming function is disabled

16 High dynamic range recording function/dynamic range stretcher function/V-Log recording function

- **[HDR]:** When set to the [SCENE FILE] menu → [GAMMA MODE SEL] → [HLG]
- **[DRS]:** When the dynamic range stretcher function is operating
- **[VLog]:** When set to the [SYSTEM] menu → [COLOR SETTING] → [V-Log]

17 Connection status of the wired LAN, wireless LAN, and USB tethering

Displays the connection status of the wired LAN, wireless LAN, and USB tethering.

- **:** When set to the wireless LAN and the ROP is not connected
- **:** When set to the wireless LAN and the ROP is connected
- **:** When set to the wireless LAN and the wireless LAN is not operating properly
- **:** When set to the wired LAN and the ROP is not connected
- **:** When set to the wired LAN and the ROP is connected
- **:** When set to the wired LAN and the wired LAN is not operating properly
- **:** When set to the USB tethering and the ROP is not connected
- **:** When set to the USB tethering and the ROP is connected
- **:** When set to the USB tethering and the USB tethering is not operating properly
- **(No display):** When wired LAN, wireless LAN, and USB tethering are disabled

18 Power status

: Displays the remaining battery level while powered with the battery. (The battery status display will change as → → → → → → while the remaining battery level gets lower. It will flash in red when the remaining battery level is zero.)

: Displayed when powered with the AC adaptor.

19 Audio level meter

Displays the audio level meter.

When P2 or MOV is set as the recording format, the audio channel displayed in the audio level meter follows the setting in the [AUDIO] menu → [OUTPUT SETTINGS] → [AUDIO OUT].

- Displays the audio channel 1 and audio channel 2 when set to [CH1]/[CH2]/[CH1/2 STEREO]/[CH1/2 MIX].
- Displays the audio channel 3 and audio channel 4 when set to [CH3]/[CH4]/[CH3/4 STEREO]/[CH3/4 MIX].
- Switches the audio channel to display in the audio level meter (audio channel 1/2 and audio channel 3/4) while the USER button to which [AUDIO MON SEL] is assigned is pressed or the USER button icon is touched.

A white frame is displayed at the position of the reference level set in the [AUDIO] menu → [REC CH SETTINGS] → [HEAD ROOM]. (Eighth from the left when set to [20dB], ninth from the left when set to [18dB], and 12th from the left when set to [12dB])

- **:** Displayed when audio cannot be recorded. (Such as when the variable frame rate recording function is enabled, and the frame rate is set different from the system frequency.)

20 Luminance of Y GET

Displays the luminance level in unit of [%] or [STOP] when the Y GET function is operating. ([STOP] is displayed as [ST])

The display unit follows the setting in the [VIDEO OUT/LCD/VF] menu → [EI ASSIST] → [Y GET UNIT].

The display unit is fixed to [%] when the [CAMERA] menu → [SW MODE] → [GAIN/ISO MODE] is set to [dB].

21 Gain

Displays the gain value in unit of [dB] or [ISO].

The display unit follows the setting in the [CAMERA] menu → [SW MODE] → [GAIN/ISO MODE].

The display unit is fixed to [dB] when the [SYSTEM] menu → [COLOR SETTING] is set to [NORMAL].

- **[AGC]:** Displayed when the auto gain control is operating.

22 ND filter

Displays the transmittance of the selected ND filter.

- **[ND1/64]:** Reduces the amount of light entering the MOS sensor to 1/64.
- **[ND1/16]:** Reduces the amount of light entering the MOS sensor to 1/16.
- **[ND1/4]:** Reduces the amount of light entering the MOS sensor to 1/4.
- **[ND:CLR]:** The ND filter is not used.

23 Date and time information

Displays the date and time information. It is not displayed when the time stamp function is enabled.

The display contents follow the setting in the [VIDEO OUT/LCD/VF] menu → [INDICATOR] → [DATE/TIME]. (page 90)

The display order for the year, month, and date follows the setting in the [OTHERS] menu → [CLOCK] → [DATE FORMAT].

Displays in the yyyy mmm dd hh:mm:ss format when set to [Y-M-D].

Displays in the mmm dd yyyy hh:mm:ss format when set to [M-D-Y].

Displays in the dd mmm yyyy hh:mm:ss format when set to [D-M-Y].

- **mmm:** Month (JAN (January), FEB (February), MAR (March), APR (April), MAY (May), JUN (June), JUL (July), AUG (August), SEP (September), OCT (October), NOV (November), DEC (December))
- **dd:** Date
- **yyyy:** Year
- **hh:** Hour
- **mm:** Minute
- **ss:** Second

24 Shutter speed

Displays the shutter speed.

Display of [sec] and [deg] can be switched with the [SCENE FILE] menu → [SYNC SCAN TYPE] during synchro scan. Displayed in time (minutes) display when set to [sec], and in aperture angle when set to [deg].

It is not displayed when the shutter function is disabled.

- **[A.SHTR]:** Displayed when the auto shutter is operating.

25 Auto iris control status

Displays the control status of the auto iris.

- **[STD]:** Standard auto iris control
- **[SPOT]:** Auto iris control for spot light
- **[BACK]:** Auto iris control for the backlight compensation

26 High-sensitivity mode

- **[H.SENS.]:** Displayed when set to the [SYSTEM] menu → [SHOOTING MODE] → [HIGH SENS.].

27 Iris

Displays the F value.

Displays the target value of the auto iris level when the auto iris level function is enabled in the auto iris.

28 Zoom

Displays the zoom value.

The display of the zoom value follows the setting in the [VIDEO OUT/LCD/VF] menu → [INDICATOR] → [ZOOM/FOCUS].

Displays in the position value from [000] to [999] when set to [NUMBER].

Displays in millimeter unit when set to [mm/feet] or [mm/m].

Displays [i] when i.ZOOM is enabled.

[i] is displayed with black and white inverted when i.ZOOM is operating.

[Z] is displayed with black and white inverted when [FAST ZOOM] is enabled.

29 System resolution/system frequency

Displays the system resolution and the system frequency set in the [SYSTEM] menu → [REC FORMAT].

- [2160-59.94p]
- [2160-50.00p]
- [2160-29.97p]
- [2160-25.00p]
- [2160-23.98p]
- [1080-59.94p]
- [1080-50.00p]
- [1080-29.97p]
- [1080-25.00p]
- [1080-23.98p]
- [1080-59.94i]
- [1080-50.00i]
- [720-59.94p]
- [720-50.00p]
- [480-59.94i]
- [576-50.00i]

30 Recording format

Displays the file format and the recording codec set in the [SYSTEM] menu → [FILE FORMAT] and [REC FORMAT].

It is not displayed when set to the [NETWORK] menu → [NETWORK FUNC] → [NDI|HX].

- [P2 AVC-I200]
- [P2 AVC-I100]
- [P2 AVC-I50]
- [P2 AVC-I422]
- [P2 AVC-G50]
- [P2 AVC-G25]
- [P2 AVC-G12]
- [MOV 420 150M]
- [MOV 420 100M]
- [MOV 422 150M]
- [MOV 422 100M]
- [MOV 422 50M]
- [MOV HEVC 200M]
- [MOV HEVC 150M]
- [MOV HEVC 100M]
- [MOV ALL-I 400M]
- [MOV ALL-I 200M]
- [MOV ALL-I 100M]
- [AVCHD PS]
- [AVCHD PH]
- [AVCHD HA]
- [AVCHD PM]
- [AVCHD SA]
- [PXY]: Displayed when the camera is set to record the proxy data in P2 format.

31 Clip name

Displays the name of the clip being recorded with up to eight characters from the beginning.

32 Recommended ND filter

Displays the ND filter recommended in the current shooting condition.

33 Message display area
Displays the message such as the camera status or the warning.
Displays the warning status of the camera in the STATUS screen for the mode check.

34 Level gauge
Tilt in horizontal direction or vertical direction can be checked.
Displayed only on the LCD monitor and the viewfinder.

35 Main face frame (orange)/face detection frame (white)
Displayed when a face is detected while the face detection AE&AF function is operating.
Displayed only on the LCD monitor and the viewfinder.

36 Tracking frame (green)
Displayed when a subject is touched while the face detection AE&AF function is operating.
Switches to tracking AE&AF mode.
Displayed only on the LCD monitor and the viewfinder.

37 Error display of auto white balance
Displays the error status of the auto white balance.

38 Error display of auto black balance
Displays the error status of the auto black balance.

39 Remote control status in an IP connection
- **[IP REMOTE]:** Displayed when the remote control is possible in the IP connection.
- **[IP REMOTE] (flashing):** Displayed when waiting for the connection in the IP connection.

40 Multi manual function
Displays the contents of the multi manual function. For details, refer to “Multi manual function” (page 157).

41 Color temperature
Displays the position and color temperature selected with the <WHITE BAL> switch. It is not displayed when the IR recording is enabled.
- **[ATW]:** Displayed when the auto tracking white balance is operating.
- **[LOCK]:** Displayed when the auto tracking white balance is locked.

42 Optical image stabilizer function
- **:** Displayed when the optical image stabilizer function is operating.
- **:** Displayed when the hybrid optical image stabilizer function is operating.

43 Scene file name
Displays the name of the selected scene file.
It is not displayed when the [SYSTEM] menu → [COLOR SETTING] is set to [V-Log].

44 Upload status display
Displays the status of the contents upload.
- **:** When the upload function is enabled and before starting or after completing the upload
- **:** When uploading
- **:** When an upload transfer error has occurred

45 Area mode function/auto focus area width adjustment function/face detection/tracking AE&AF function
- **[AREA]:** Displayed when the area mode function is operating.
- **[AF AREA]:** Displayed when the auto focus area width adjustment function is operating.
- **:** Displayed when the face detection is enabled and AF is functioning.
- **:** Displayed when the face detection is enabled and AE&AF is functioning.
- **:** Displayed when the tracking is enabled.
- **:** Displayed when the face detection function cannot operate.

46 Waveform monitor
Displays the video status in waveform or vector.
Displayed only on the LCD monitor and the viewfinder.

47 IR recording
- **[IR]:** Displayed when the IR recording is enabled.

48 Digital zoom
Displays the digital zoom ratio.
- **[D2×]:** Two times
- **[D5×]:** Five times
- **[D10×]:** Ten times

49 Focus
Displays the focus value.
The display of the focus value follows the setting in the [VIDEO OUT/LCD/VF] menu → [INDICATOR] → [ZOOM/FOCUS].
Displays in the position value from [00] to [99] when set to [NUMBER].
Displays in feet unit when set to [mm/feet].
Displays in meter unit when set to [mm/m].
- **:** Displayed when the focus macro is enabled.
- **[AF]:** Displayed when set to auto focus. Displayed with black and white inverted when focus macro is operating.
- **[MA]:** Displayed when the manual focus assist is enabled in the manual focus. Displayed with black and white inverted when focus macro is operating.
- **[MF]:** Displayed when the manual focus assist is disabled in the manual focus. Displayed with black and white inverted when focus macro is operating.

50 Audio monitor volume adjustment
Displayed when the <AUDIO MON/ADV> button is operated to adjust the volume of the speaker or the headphones. The display is cleared approximately three seconds after the operation.

Screen display during playback

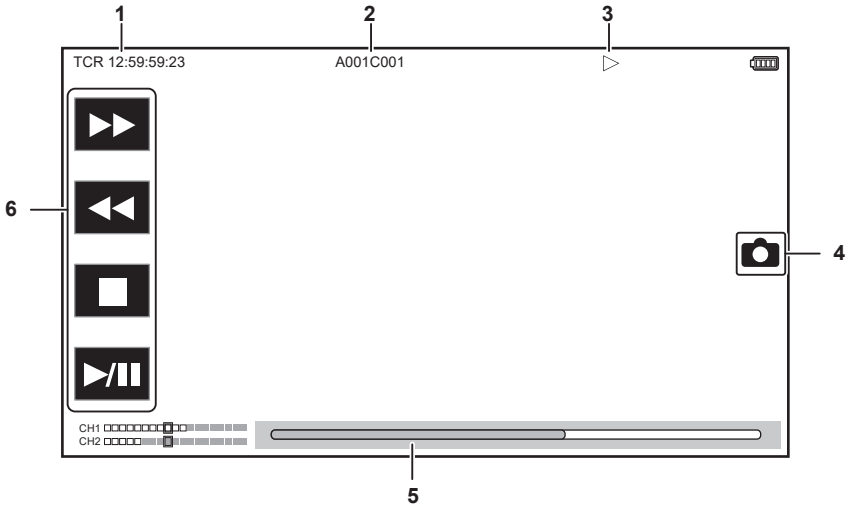

1 Time code display
Every time the <COUNTER> button is pressed, the display is toggled in the order of [TCR ∗∗:∗∗:∗∗:∗∗], [UBR ∗∗ ∗∗ ∗∗ ∗∗], [CLIP ∗:∗∗:∗∗:∗∗], and no display.

2 Clip name
Displays the name of the clip being played back with up to eight characters from the beginning.

3 Playback status
Displays the status of playback.
Displays only during playback.
- **■:** Stop
- **▶:** Playback
- **II:** Pause
- **I◀:** Starting playback position
- **▶I:** Ending playback position
- **▶▶:** Fast-forward playback (10x speed)
- **▶▶▶:** Fast-forward playback (20x speed)
- **◀◀:** Fast-reverse playback (10x speed)
- **◀◀◀:** Fast-reverse playback (20x speed)
- **I▶:** Slow playback/frame-by-frame
- **◀I:** Reverse slow playback/frame-by-frame rewind

4 Still picture recording icon
Touching the icon while playing back or while paused records the scene as a still picture.

5 Direct playback bar
Displays the general position that is being played back.

6 Playback navigation icon
Operates by touching the icon.
- **▶▶:** Fast-forward playback
- **◀◀:** Fast-reverse playback
- **■:** Stop
- **▶/II:** Playback/pause

Checking and displaying shooting status

The screen to check the setting and status of the camera can be displayed.
Press the <DISP/MODE CHK> button while the camera image screen is displayed to hide most of the items.
Press the <DISP/MODE CHK> button for one second or more while the camera image screen is displayed to display the STATUS screen of the mode check and check the shooting status.
For details about each item that can be displayed in the mode check, refer to “Mode check display” (page 182).
The following table indicates each item to display/hide in each screen.
- “✓” indicates displaying and “—” indicates hiding.
- You can select to display or hide each item in the [VIDEO OUT/LCD/VF] menu → [INDICATOR].

No	Item	Camera image screen	When the <DISP/MODE CHK> button is pressed	STATUS	Playback screen
1	Time code	✓	✓	✓	✓

No	Item	Camera image screen	When the <DISP/MODE CHK> button is pressed	STATUS	Playback screen
2	Frame rate	✓	—	✓	—
3	<AUTO/MANUAL> switch	✓	—	✓	—
4	Message display area for stop of cooling fan	✓	✓	✓	✓
5	Tally lamp command status via the network	✓	—	✓	—
6	Recording status (card slot 1)	✓	✓*1	✓	—
7	Remaining recording capacity and status of the memory card (card slot 1)	✓	—*2	✓	—
8	Bonding Device Status	✓	—	✓	—
9	External equipment recording operation control status (<SDI OUT>/<HDMI> terminal)	✓	—	✓	—
10	Recording status (card slot 2)	✓	✓*1	✓	—
11	Remaining recording capacity and status of the memory card (card slot 2)	✓	—*2	✓	—
12	Special recording function	✓	—	✓	—
13	Two-slot function	✓	—	✓	—
14	Flash band compensation function	✓	—	✓	—
15	Streaming status	✓	—	✓	—
16	High dynamic range recording function/dynamic range stretcher function/V-Log recording function	✓	—	✓	—
17	Connection status of the wired LAN, wireless LAN, and USB tethering	✓	—	✓	—
18	Power status	✓	—*2	✓	✓
19	Audio level meter	✓	—	✓	✓
20	Luminance of Y GET	✓	✓	✓	—
21	Gain	✓	—	✓	—
22	ND filter	✓	—	✓	—
23	Date and time information	✓	—	✓	—
24	Shutter speed	✓	—	✓	—
25	Auto iris control status	✓	—	✓	—
26	High-sensitivity mode	✓	—	✓	—
27	Iris	✓	—	✓	—
28	Zoom	✓	—	✓	—
29	System resolution/system frequency	✓	—	✓	—
30	Recording format	✓	—	✓	—
31	Clip name	✓	—	✓	✓*3
32	Recommended ND filter	✓	✓	✓	—
33	Message display area	✓	✓	✓	✓
34	Level gauge	✓	✓	✓	—
35	Main face frame (orange)/face detection frame (white)	✓	✓	✓	—
36	Tracking frame (green)	✓	✓	✓	—
37	Error display of auto white balance	—	—	✓	—
38	Error display of auto black balance	—	—	✓	—
39	Remote control status in an IP connection	—	—	✓	—
40	Multi manual function	✓	—*4	✓	—
41	Color temperature	✓	—	✓	—
42	Optical image stabilizer function	✓	—	✓	—
43	Scene file name	✓	—	✓	—
44	Upload status display	✓	—	✓	—
45	Area mode function/auto focus area width adjustment function/face detection/tracking AE&AF function	✓	—	✓	—
46	Waveform monitor	✓	✓	—	—
47	IR recording	✓	—	✓	—
48	Digital zoom	✓	—	✓	—
49	Focus	✓	—	✓	—
50	Audio monitor volume adjustment	✓	✓	✓	✓

*1 This is not displayed in the status where ● is not displayed.
*2 Displays when the remaining recording capacity of the memory card or remaining battery level gets low.
*3 The display position differs in the playback screen. Refer to Screen display during playback (page 180).
*4 Displays when the multidial, <▶/❚❚> button, <■> button, or <SET> button is pressed. The display is cleared approximately three seconds after the operation.

Mode check display

The camera settings and status can be displayed on the viewfinder or LCD monitor screen for check.

Press the <DISP/MODE CHK> button for one second or more while displaying the camera image screen to display the STATUS screen of the mode check.

The display toggles in the order of the STATUS screen, FUNCTION screen, AUDIO screen, SWITCH screen, NETWORK screen and the camera image screen each time the <DISP/MODE CHK> button is pressed.

Each screen of the mode check is displayed for approximately five seconds.

The screen does not switch while the <DISP/MODE CHK> button is pressed.

Press the <EXIT> button while each screen is displayed to return to the camera image screen.

FUNCTION screen

Displays the video output settings and information of the recording media.

Item		Description
[VIDEO OUT]	[VIDEO OUT SEL]	Displays the output destination of the video and audio with [SDI + HDMI]/[AV + HDMI].
	[SDI OUT FORMAT]/[AV OUT FORMAT]	Displays as follows depending on the setting for the output destination of video and audio. ● When set to [SDI + HDMI]: The signal output from the <SDI OUT> terminal is displayed with [1920×1080p][1920×1080i]/[1920×1080PsF]/[1280×720p]/[720×480i]/[720×576i]. ● When set to [AV + HDMI]: The signal output from the <AV OUT> terminal is displayed with [720×480i]/[720×576i].
	[SDI OUT CHAR]/[AV OUT CHAR]	Displays as follows depending on the setting for the output destination of video and audio. ● When set to [SDI + HDMI]: Displays whether to superimpose the character to the output from the <SDI OUT> terminal with [ON]/[OFF]. ● When set to [AV + HDMI]: Displays whether to superimpose the character to the output from the <AV OUT> terminal with [ON]/[OFF].
	[HDMI OUT FORMAT]	The signal output from the <HDMI> terminal is displayed with [3840×2160p]/[3840×2160p(420/8bit)]/[1920×1080p]/[1920×1080i]/[1280×720p]/[720×480p]/[720×576p].
	[HDMI OUT CHAR]	Displays whether to superimpose the character to the output from the <HDMI> terminal with [ON]/[OFF].
[HDR/SDR] (When the [SYSTEM] menu → [COLOR SETTING] is set to [NORMAL])	[SDI OUT]/[AV OUT]	Displays as follows depending on the setting for the output destination of video and audio. ● When set to [SDI + HDMI]: The output image from the <SDI OUT> terminal is displayed with [HDR]/[SDR]. ● When set to [AV + HDMI]: The output image from the <AV OUT> terminal is displayed with [SDR].
	[HDMI OUT]	The output image from the <HDMI> terminal is displayed with [HDR]/[SDR].
	[LCD/VF]	Displays the output image from the LCD monitor and the viewfinder with [HDR]/[SDR].
[V-Log/709] (When the [SYSTEM] menu → [COLOR SETTING] is set to [V-Log])	[SDI OUT]/[AV OUT]	Displays as follows depending on the setting for the output destination of video and audio. ● When set to [SDI + HDMI]: The output image from the <SDI OUT> terminal is displayed with [V-Log]/[V-709]. ● When set to [AV + HDMI]: The output image from the <AV OUT> terminal is displayed with [V-709].
	[HDMI OUT]	The output image from the <HDMI> terminal is displayed with [V-Log]/[V-709].
	[LCD/VF]	Displays the output image from the LCD monitor and the viewfinder with [V-Log]/[V-709].
[CARD STATUS]	—	Displays the status, remaining recording capacity, and the total capacity of the memory card inserted in the card slot. It is not displayed when set to the [NETWORK] menu → [NETWORK FUNC] → [NDI|HX]. The status of the memory card that is displayed are following types. ● [NO CARD]: Memory card is not inserted. ● [UNSUPPORTED]: Memory card is not supported. ● [FORMAT ERROR]: Memory card cannot be used. (Format error) ● [PROTECTED]: It is write protected. (The write-protection switch of the memory card is set to the LOCK side) ● [NO REMAIN]: There is no remaining recording capacity. ● [NOT SDXC]: SDXC memory card is not inserted in the MOV recording. ● Cases other than above: The remaining recording capacity is displayed in 0% through 100%.

Item		Description
	[TOTAL]	Displays the remaining recording capacity/total capacity of the memory cards in the card slot 1 and the card slot 2.
	[SLOT1]	Displays the status and remaining recording capacity/total capacity of the memory card in card slot 1.
	[SLOT2]	Displays the status and remaining recording capacity/total capacity of the memory card in card slot 2.

AUDIO screen

Displays the audio input/output settings and the audio level meter.

When P2 or MOV is set as the recording format, the audio channel displayed in the audio level meter follows the setting in the [AUDIO] menu → [OUTPUT SETTINGS] → [AUDIO OUT].

- Displays the audio channel 1 and audio channel 2 when set to [CH1]/[CH2]/[CH1/2 STEREO]/[CH1/2 MIX].
- Displays the audio channel 3 and audio channel 4 when set to [CH3]/[CH4]/[CH3/4 STEREO]/[CH3/4 MIX].
- Switches the audio channel to display in the audio level meter (audio channel 1/2 and audio channel 3/4) while the USER button to which [AUDIO MON SEL] is assigned is pressed or the USER button icon is touched.

Item		Description
[AUDIO]	[AUDIO OUT]	Displays the audio channel and the format output from the <AV OUT> terminal, headphone terminal, and the built-in speaker with [CH1]/[CH2]/[CH1/2 STEREO]/[CH1/2 MIX]/[CH3]/[CH4]/[CH3/4 STEREO]/[CH3/4 MIX].
[SELECT]	[CH1] - [CH4]	The audio to be recorded in each channel is displayed with [INT(L)]/[INT(R)]/[INPUT1]/[INPUT2].
[LINE/MIC]	[CH1] - [CH4]	The audio input signal of each channel is displayed with [LINE]/[MIC]/[MIC+48V]. Displays [---] when [INT(L)] or [INT(R)] is selected as the audio to be recorded.
[LEVEL]	[CH1] - [CH4]	Displays the adjustment method of the recording level of the audio for each channel with [AUTO]/[MANU].
[LIMITER]	[CH1] - [CH4]	Displays enable/disable of limiter for each channel with [ON]/[OFF]. Displays [---] when the adjustment method of the recording level of the audio is set to [AUTO].
[LOWCUT]	[CH1] - [CH4]	Displays enable/disable of low-cut filter for each channel with [ON]/[OFF].

SWITCH screen

Displays the function assigned to the USER switch, <GAIN> switch, and <WHITE BAL> switch as well as the setting value.

Item		Description
[USER SW]	[1] - [7]	Displays the function assigned to <USER 1> through <USER 7> buttons.
[OTHER ASSIGN]	[GAIN L]	Displays the gain value assigned to the <L> position of the <GAIN> switch.
	[GAIN M]	Displays the gain value assigned to the <M> position of the <GAIN> switch.
	[GAIN H]	Displays the gain value assigned to the <H> position of the <GAIN> switch.
	[S.GAIN]	Displays the list of gain values assigned as a super gain. It is not displayed when the [CAMERA] menu → [SW MODE] → [GAIN/ISO MODE] is set to [ISO].
	[WHITE BAL A]	Displays the color temperature assigned to the <A> position of the <WHITE BAL> switch. Displays [ATW] when the auto tracking white balance function is assigned.
	[WHITE BAL B]	Displays the color temperature assigned to the <B> position of the <WHITE BAL> switch. Displays [ATW] when the auto tracking white balance function is assigned.
	[WHITE BAL PRST]	Displays the color temperature assigned to the <PRST> position of the <WHITE BAL> switch. Displays [ATW] when the auto tracking white balance function is assigned. Color temperature and [VAR] are displayed when [VAR] is assigned.

NETWORK screen

Displays the settings of the network function.

Item		Description
[NETWORK]	[DEVICE SEL]	Displays the device that connects an external equipment (computer, etc.) and the camera with [LAN]/[WLAN]/[USB TETHERING]/[OFF].
	[NETWORK FUNC]	Displays the network function of the camera with [STREAMING]/[NDI|HX]/[OFF].
	[STRM FORMAT]	Displays the streaming format. It is not displayed when set to the [NETWORK] menu → [NETWORK FUNC] → [OFF].
	[STRM DATA TYPE]	Displays the type of the streaming connection information. It is not displayed when set to anything other than the [NETWORK] menu → [NETWORK FUNC] → [STREAMING].
	[IP REMOTE]	Displays enable/disable status of the IP remote function.

Item		Description
	[IPv4 ADDRESS]	Displays the IP address of IPv4. It is not displayed when set to the [NETWORK] menu → [DEVICE SEL] → [OFF].
	[IPv6 ADDRESS]	Displays the IP address of IPv6. [DISABLE] is displayed when the [NETWORK] menu → [LAN PROPERTY] → [IPv6 SETTING] → [ENABLE/DISABLE] → [DISABLE] is set. It is not displayed when set to anything other than the [NETWORK] menu → [DEVICE SEL] → [LAN].

Chapter 8 Connecting to External Devices

This chapter describes the external devices that can be connected to the camera.

Connecting with headphones and TV/monitor

Headphones

Headphones (optional) can be connected to the headphone terminal (3.5 mm stereo mini jack).

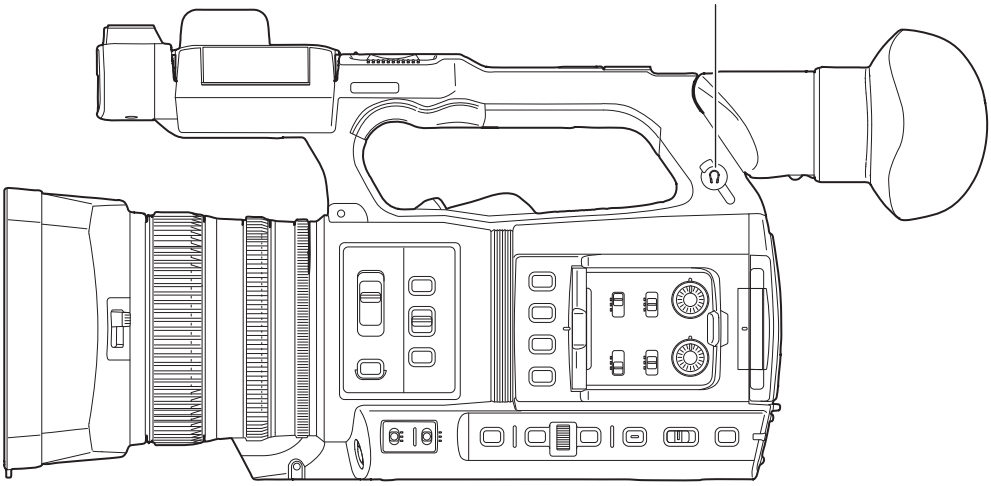

NOTE

- Audio is not output from the built-in speaker when headphones are connected to the headphone terminal.

Remote control

Connect the remote control unit (optional) to the <REMOTE> terminal (2.5 mm diameter super mini jack) to operate some of the functions remotely.

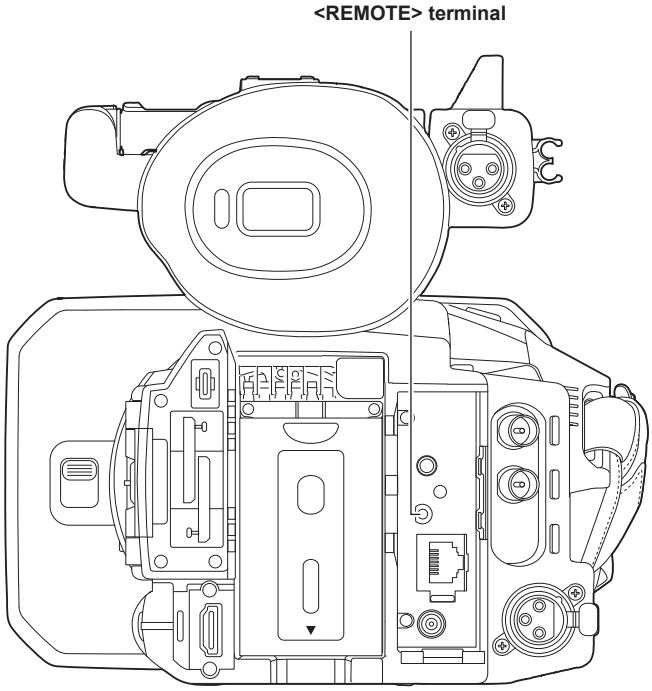

TV/monitor

A TV or monitor can be connected as shown in the following figure.

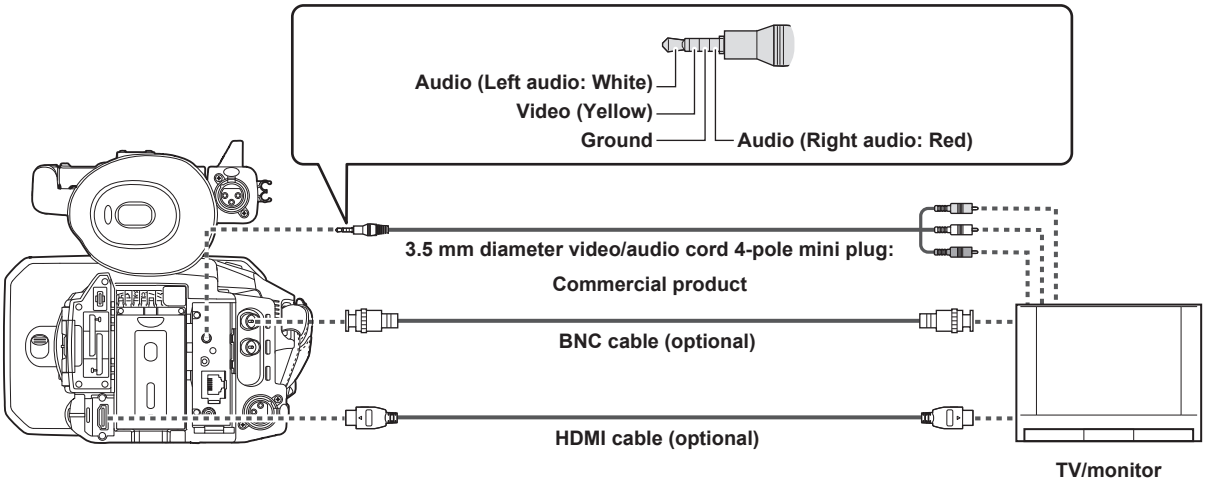

NOTE

- VIERA Link is not supported on the camera. Note that the VIERA Link of other device may not properly operate when connected to the VIERA Link compatible device with a HDMI cable (optional).
- The SD resolution signal output from the <HDMI> terminal is output as a progressive signal (480P, 576P).
- For the BNC cable (optional) connected to the <SDI OUT> terminal, prepare a double-shielded cable equivalent to 5C-FB.
- Use the double shielded cable supporting 4K/60P as the HDMI cable (optional). Also, it is recommended to use the Panasonic HDMI cable compatible to 4K/60P as the HDMI cable.

Connection function via the <USB3.0 DEVICE>/<USB2.0 HOST> terminal

Connection with a computer in card reader mode

Connect the camera to a computer via the USB type C cable to use the camera as a card reader for the memory card.

Connecting to a computer

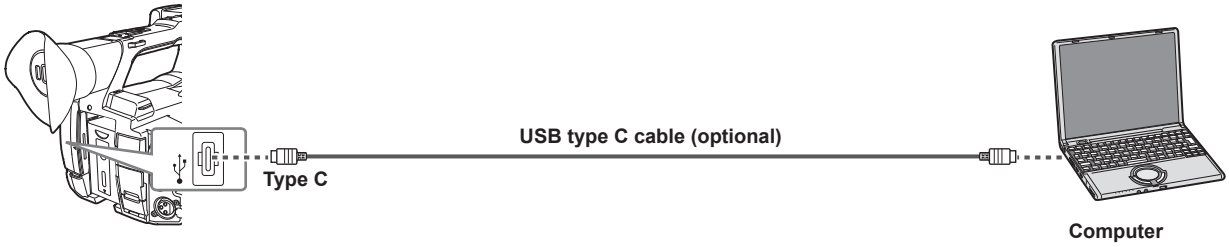

1 Connect the USB cable to the <USB3.0 DEVICE> terminal.

2 Select the [OTHERS] menu → [USB DEVICE] → [CARD READER MODE].

3 Select [YES] when the confirmation message is displayed.

During USB connection, [USB connected. Please operate via PC.] is displayed in the center of the viewfinder or LCD monitor.
If the USB connection is being moved or it is not connected properly, [Connect this unit to PC using USB cable.] is displayed.

4 Exit the card reader mode.

There are following methods.

- Turn the power switch of the camera to < ⏻ > (standby).
- Press the <EXIT> button.

After exiting the card reader mode, returns to camera shooting status in approximately five seconds.

NOTE

- A USB type C cable is not supplied with this camera. Prepare a commercial USB type C cable (double-shielded for noise suppression).
- Using a USB cable within 1.5 m as much as possible is recommended.
- When connecting the camera to a computer via USB, ensure that no other device is connected to the computer via USB.
- Do not remove the memory card when connecting the camera via USB.
- The card access lamp while connected to USB will turn off unless accessing.
- When the camera is operating in the card reader mode, camera shooting, recording/playback operation, or thumbnail operation of the clip is not allowed.
- When the camera is operating in the card reader mode, the remaining recording capacity and status of the memory card are not displayed. Also, video/audio cannot be output or displayed.
- The LCD monitor lights up by touching the monitor if it has turned out to save energy.
- Data from a computer cannot be written to the memory card inserted into the camera.

Remote operation by iPhone/iPad or Android terminal

The camera can be connected to the wireless LAN by attaching a wireless module (optional) compatible to the camera to the <USB2.0 HOST> terminal of the camera.

Some of the functions can be remotely operated by connecting the camera with iPhone/iPad or Android terminal with the CX ROP app installed.
(page 200)

Connecting the remote camera controller (AW-RP150G)

Connects the camera and remote camera controller AW-RP150G (optional) via LAN cable to control some functions remotely. (page 202)

Chapter 9 Network Connection

This chapter describes how to use the camera by connecting to a network.

Network connection

The camera can be connected to a network via wired LAN, wireless LAN, and USB tethering.

Also, high speed network connection is possible when the camera is connected to a wireless LAN or wired LAN by using the bonding device.

For details on wireless module, bonding device, and iPhone/iPad and Android devices for USB tethering that can be connected, refer to the support desk at the following website.

https://pro-av.panasonic.net/

Attach the wireless module (optional) to the <USB2.0 HOST> terminal to use a wireless LAN.

Connect a LAN cable to the <LAN> terminal on the rear side to use wired LAN.

When using USB tethering, connect an iPhone/iPad or Android device to the <USB2.0 HOST> terminal using a USB cable.

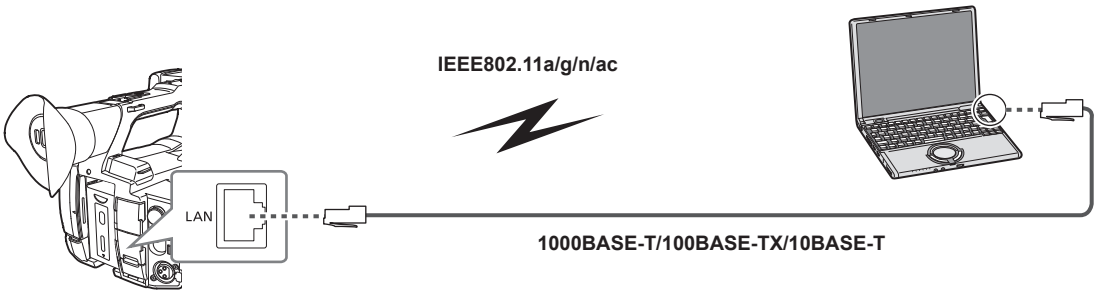

NOTE

- For the cable to be connected to the <LAN> terminal, use Category 6 or higher LAN cable.
- Use the cable to connect to the <USB2.0 HOST> terminal after confirming the connection terminal of the device to connect with the camera. The connection may become unstable depending on the length or the specification of the USB cable.

Available functions

When the camera is connected to a network, the following functions are available.

- Connecting to CX ROP application
- Streaming function
- NDI|HX function
- Linking to the Panasonic cloud service
- IP remote controlling (wired LAN only) the camera via remote camera controller (AW-RP150G)

Preparing for connection

For the wireless module

Mount the wireless module (optional) to the camera.

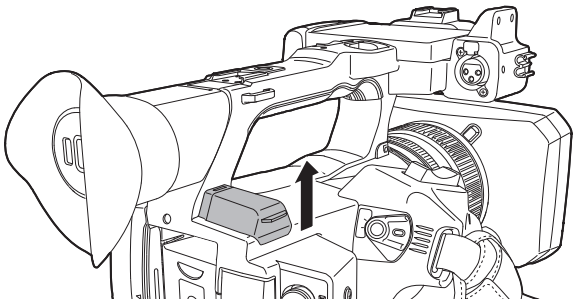

Fig. 1

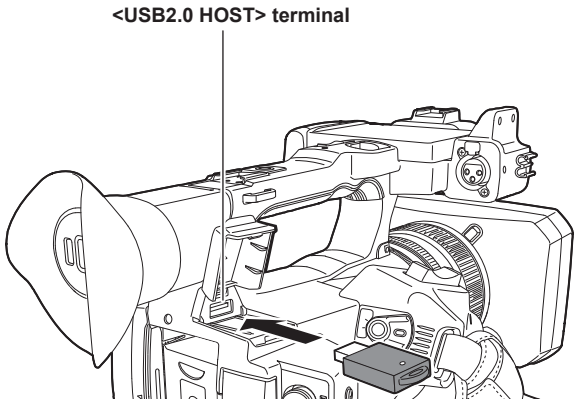

Fig. 2

1 Open the <USB2.0 HOST> terminal cover on the top-back side. (Fig. 1)

2 Connect the wireless module to the <USB2.0 HOST> terminal. (Fig. 2)

Insert it all the way.

NOTE

- When removing the wireless module, pull it out straight.

For the wired LAN

Connect a LAN cable.

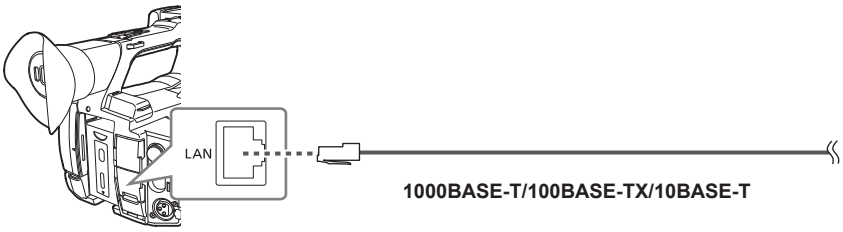

1 Insert the LAN cable into the <LAN> terminal on the rear side.

For USB tethering

Connect a device (iPhone/iPad or Android device) for USB tethering to the camera.

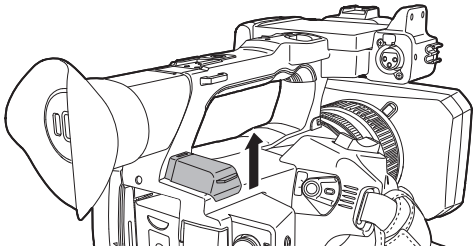

Fig. 1

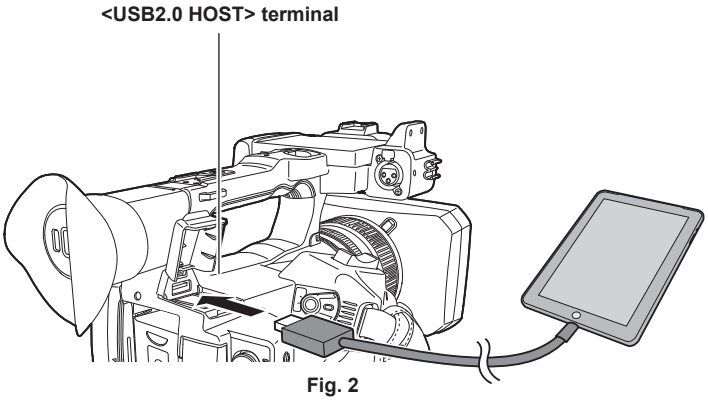

Fig. 2

1 Open the <USB2.0 HOST> terminal cover on the top-back side. (Fig. 1)

2 Connect the device (iPhone/iPad or Android device) for USB tethering to the <USB2.0 HOST> terminal using a USB cable. (Fig. 2)

Insert it all the way.

NOTE

- When removing the USB cable, pull it out straight.

Network settings

Wireless LAN settings

This is the setting to connect with the iPhone/iPad or the Android terminal directly or to connect to the wireless access point via wireless LAN.

Direct connection ([DIRECT])

This is the setting to connect the camera to the iPhone/iPad or Android terminal directly.
The camera may restart if necessary when the setting is changed.

1 Select the [NETWORK] menu → [DEVICE SEL] → [WLAN].

2 Select the [NETWORK] menu → [WLAN PROPERTY] → [TYPE] → [DIRECT].

3 In the [NETWORK] menu → [WLAN PROPERTY], set each item as necessary.

- For details about the settings, refer to “Setting items in [WLAN PROPERTY] when set to [DIRECT]” (page 194).

4 Select the SSID of the camera from the SSID list in the iPhone/iPad or Android terminal, and enter the password (encryption key).

Display the wireless access point list screen in wireless LAN setting, and select SSID of the camera.
- Factory setting: [AG-CX350E]

When the password confirmation screen appears, enter the password (encryption key).
For details, refer to the operating instruction of the iPhone/iPad or Android terminal.
- Factory setting: [0123456789012345678 9abcdef]

5 Close the menu or return to the level of the [NETWORK] menu.

6 Check the network connection.

Once connected, is displayed on the screen of the camera.

■ **Setting items in [WLAN PROPERTY] when set to [DIRECT]**

[SSID]		Network name of the camera (SSID) (Factory setting: [AG-CX350E])
[BAND]		Setting to switch between two communication method ([2.4GHz] or [5GHz]) (Factory setting: [2.4GHz])
[CHANNEL(2.4GHz)]		Channel to be used when [BAND] is set to [2.4GHz] (Factory setting: [AUTO])
[CHANNEL(5GHz)]		Channel to be used when [BAND] is set to [5GHz] (Factory setting: [AUTO])
[ENCRYPT KEY]		WPA2 encryption key (Factory setting: [0123456789012345678 9abcdef])
[IPv4 SETTING]	[DHCP]	Setting the DHCP function • **[OFF]:** Does not use DHCP. • **[CLIENT]:** Automatically acquired with the DHCP when connected by setting [TYPE] to [INFRA(SELECT)] or [INFRA(MANUAL)]. (Cannot be selected.) • **[SERVER]:** Enables the DHCP server function of the camera when connecting with [TYPE] set to [DIRECT]. (Factory setting: [OFF])
	[IP ADDRESS]	IP address of the camera (Factory setting: [192.168.0.1])
	[SUBNET MASK]	Subnet mask (Factory setting: [255.255.255.0])

NOTE

- The startup time after turning on the power may be longer due to starting of the network.
- When changing the settings of [DEVICE SEL], the changes will not be reflected until the camera is restarted. Also, the setting screen termination may take some time due to the restart of the network service after the setting is changed.
- Some of the items not included in the table cannot be set.
- [ENCRYPTION] will be fixed to [WPA2-AES].
- Depending on the used wireless module, some of the items in [BAND], [CHANNEL(2.4GHz)], and [CHANNEL(5GHz)] may not be able to select.

Connecting to the wireless access point ([INFRA(SELECT)]/[INFRA(MANUAL)])

This is the setting to connect the camera to a wireless access point.

When connecting by searching the wireless access point (SSID)

1 Select the [NETWORK] menu → [DEVICE SEL] → [WLAN].

2 Select the [NETWORK] menu → [WLAN PROPERTY] → [TYPE] → [INFRA(SELECT)].

3 In the [NETWORK] menu → [WLAN PROPERTY], set each item as necessary.

- For details about the setting items, refer to “[WLAN PROPERTY] setting items when set to [INFRA(SELECT)] or [INFRA(MANUAL)]” (page 195).

4 Select the SSID of the searched wireless access point.

Setting is completed when the [ENCRYPT KEY] (encryption key, password) is not set.

5 If the [ENCRYPT KEY] is set, enter the password, and select [Enter].

6 Close the menu or return to the level of the [NETWORK] menu.

7 Check the network connection.

Once connected, is displayed on the screen of the camera.

When entering the wireless access point (SSID) manually

1 Select the [NETWORK] menu → [DEVICE SEL] → [WLAN].

2 Select the [NETWORK] menu → [WLAN PROPERTY] → [TYPE] → [INFRA(MANUAL)].

3 In the [NETWORK] menu → [WLAN PROPERTY], set each item as necessary.

- For details about the setting items, refer to "[WLAN PROPERTY] setting items when set to [INFRA(SELECT)] or [INFRA(MANUAL)]" (page 195).

4 In the [NETWORK] menu → [WLAN PROPERTY] → [SSID], enter the SSID of the wireless access point to connect.

Setting is completed when the [ENCRYPT KEY] (encryption key, password) is not set.

5 If the [ENCRYPT KEY] is set, enter the password, and select [Enter].

6 Close the menu or return to the level of the [NETWORK] menu.

7 Check the network connection.

Once connected, is displayed on the screen of the camera.

■ [WLAN PROPERTY] setting items when set to [INFRA(SELECT)] or [INFRA(MANUAL)]

[ENCRYPTION]		[WPA-TKIP], [WPA-AES], [WPA2-TKIP], [WPA2-AES], [NONE] (Factory setting: [WPA2-AES])
[ENCRYPT KEY]		WPA/WPA2 encryption key (Factory setting: [0123456789012345678 9abcdef])
[IPv4 SETTING]	[DHCP]	Setting the DHCP function • **[OFF]:** Does not use DHCP. • **[CLIENT]:** Automatically acquired with the DHCP when connected by setting [TYPE] to [INFRA(SELECT)] or [INFRA(MANUAL)]. • **[SERVER]:** When connecting by setting [TYPE] to [DIRECT], enable the DHCP server function of the camera. (Cannot be selected.) (Factory setting: [OFF])
	[IP ADDRESS]	IP address of the camera (Factory setting: [192.168.0.1])
	[SUBNET MASK]	Subnet mask (Factory setting: [255.255.255.0])
	[DEFAULT GATEWAY]	Default gateway (Factory setting: [192.168.0.254])
	[PRIMARY DNS]	Primary DNS server setting (Factory setting: [0.0.0.0])
	[SECONDARY DNS]	Secondary DNS server setting (Factory setting: [0.0.0.0])

NOTE

- The startup time after turning on the power may be longer due to starting of the network.
- When changing the settings of [DEVICE SEL], the changes will not be reflected until the camera is restarted. Also, the setting screen termination may take some time due to the restart of the network service after the setting is changed.
- ENCRYPTION in WEP is not supported.
- Some items cannot be set depending on the settings such as [DHCP].
- When [DHCP] is set to [CLIENT], some of the information acquired automatically with DHCP is displayed in the menu.
  For details of the network status, confirm by selecting the [NETWORK] menu → [INFORMATION] → [STATUS].
- All of the IP address, subnet mask, and default gateway must be correctly set.
  For details, contact the network administrator.
- When the default gateway or DNS is not to be used, set to [0.0.0.0].
  However, DNS cannot be disabled when [DHCP] is set to [CLIENT].
- Depending on the network environment, even if [DHCP] is set to [CLIENT], entry of the DNS value manually may be required. When invalid DNS value is entered in any other cases, the automatic assignment by DHCP will not operate properly.

Wired LAN settings

These are the settings when using a wired LAN.

1 Select the [NETWORK] menu → [DEVICE SEL] → [LAN].

2 In the [NETWORK] menu → [LAN PROPERTY], set each item as necessary.

- For details about the setting items, refer to "Setting items in [LAN PROPERTY] when set to [LAN]" (page 196).

3 Close the menu or return to the level of the [NETWORK] menu.

4 Configure the settings of the wired LAN on your device such as a computer.

For more information, refer to the operating instructions or help for the connection device.

■ Setting items in [LAN PROPERTY] when set to [LAN]

[MAC ADDRESS]		MAC address of the wired LAN (cannot be changed)
[IPv4 SETTING]	[DHCP]	Setting the DHCP function • [OFF]: Does not use DHCP. • [CLIENT]: Acquires automatically with DHCP. • [SERVER]: Enables the DHCP server function of the camera. (Factory setting: [OFF])
	[IP ADDRESS]	IP address of the camera (Factory setting: [192.168.0.1])
	[SUBNET MASK]	Subnet mask (Factory setting: [255.255.255.0])
	[DEFAULT GATEWAY]	Default gateway (Factory setting: [192.168.0.254])
	[PRIMARY DNS]	Primary DNS server setting (Factory setting: [0.0.0.0])
	[SECONDARY DNS]	Secondary DNS server setting (Factory setting: [0.0.0.0])
[IPv6 SETTING]	[ENABLE/DISABLE]	IPv6 setting • [ENABLE]: Uses IPv6. • [DISABLE]: Does not use IPv6. (Factory setting: [DISABLE])
	[DHCP]	Setting the DHCP function • [OFF]: Does not use DHCP. • [CLIENT]: Acquires automatically with DHCP. (Factory setting: [OFF])
	[IP ADDRESS]	IP address of the camera (Factory setting: [::])
	[PREFIX LENGTH]	Prefix length settings of the subnet (Factory setting: [64])
	[DEFAULT GATEWAY]	Default gateway (Factory setting: [::])
	[PRIMARY DNS]	Primary DNS server (Factory setting: [::])
	[SECONDARY DNS]	Secondary DNS server (Factory setting: [::])

NOTE

- Some items cannot be selected depending on the settings such as [DHCP].
- The startup time after turning on the power may be longer due to starting of the network.
- When changing the settings of [DEVICE SEL], the changes will not be reflected until the camera is restarted. Also, the setting screen termination may take some time due to the restart of the network service after the setting is changed.
- All of the IP address, subnet mask, and default gateway must be correctly set.
  For details, contact the network administrator.
- Set [0.0.0.0] or [::] when not using the default gateway or DNS.
  However, DNS cannot be disabled when [DHCP] is set to [CLIENT].
- Depending on the network environment, even if [DHCP] is set to [CLIENT], entry of the DNS value manually may be required. When invalid DNS value is entered in any other cases, the automatic assignment by DHCP will not operate properly.
- DHCP and DNS may not function properly depending on the network environment.
- The IP address cannot be automatically acquired depending on the connection timing with network devices if [LAN PROPERTY] → [IPv6 SETTING] → [DHCP] → [CLIENT] is set.
  In this case, reconnect the LAN cable or contact your network administrator.

USB tethering setting

These are the settings when using USB tethering.

1 Select the [NETWORK] menu → [DEVICE SEL] → [USB TETHERING].

2 Enable USB tethering (Internet sharing) in the setting screen for network on the USB tethering device connected to the camera.

Allow access of the connected device if an alert to confirm permission is displayed on the USB tethering device. Connection will not be complete until permission is given.

3 Close the menu or return to the level of the [NETWORK] menu.

4 Check the network connection.

Once connected, is displayed on the screen of the camera.

NOTE

- The startup time after turning on the power may be longer due to starting of the network.
- When changing the settings of [DEVICE SEL], the changes will not be reflected until the camera is restarted. Also, the setting screen termination may take some time due to the restart of the network service after the setting is changed.
- For details of the network status, confirm by selecting the [NETWORK] menu → [INFORMATION] → [STATUS].
- IP address, DNS, and other setting cannot be set manually when connecting to the network by USB tethering.
- The icon to show that the connection is complete indicates that communication between this camera and the USB tethering device has been established. When the USB tethering device cannot connect to the Internet, the camera cannot connect to the Internet even if the icon that indicates connection is complete is displayed on the camera's screen.
- When a USB tethering device is connected to the camera using a USB cable, the USB tethering device will be charged. If a battery is used to supply power to the camera, continuous recordable time will be shortened.

Specifying the network settings using the settings tool

Camera settings

1 From the [NETWORK] menu → [UTILITY] → [EASY IP SETTING], select anything other than [DISABLE].

2 Select the [NETWORK] menu → [UTILITY] → [EASY IP CAMERA TITLE].

3 Enter the name (nickname) of the camera.

Entered name will be the name to be displayed on the EASY IP Setup Software screen.

Installing software

Download and install EASY IP Setup Software (EasyIPSetup.exe) from the following website. (Windows)
https://pro-av.panasonic.net/

■ **EASY IP Setup Software (EasyIPSetup.exe)**

Configure the network settings of the camera.

Performing settings of the camera using EASY IP Setup Software

The settings for the camera network can be performed using EASY IP Setup Software.
The settings for multiple cameras need to be performed on each camera.
If the settings cannot be specified using EASY IP Setup Software, specify the settings of the camera in the [NETWORK] menu.

NOTE

- EASY IP Setup Software can be used only when all of the following conditions are satisfied.
  - The [NETWORK] menu → [UTILITY] → [EASY IP SETTING] is set to anything other than [DISABLE]
- The camera will not operate properly after the network settings are specified if the IP address is the same as another device on the same network. Set a unique IP address for the camera.
- EASY IP Setup Software cannot be used from a different subnet via a router.
- Use Ver.4.25R00 or later for EASY IP Setup Software.

Setting procedure

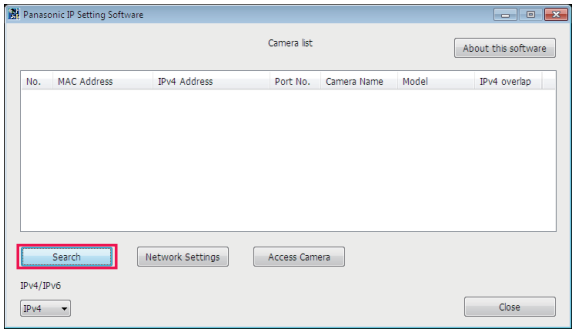

Fig. 1

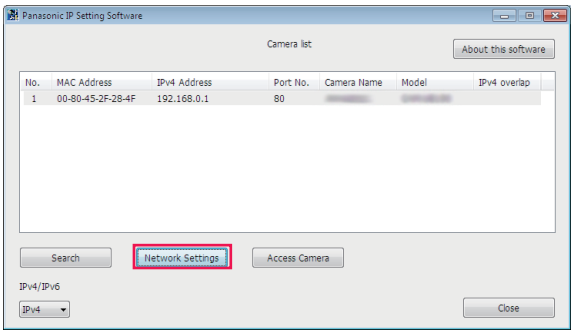

Fig. 2

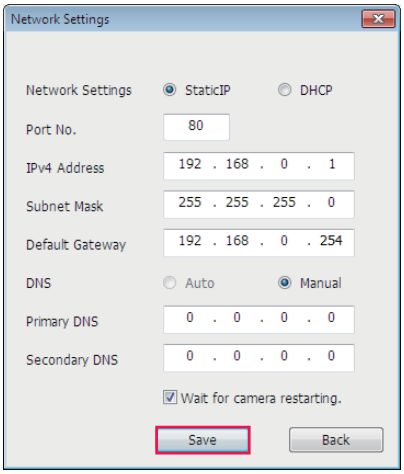

Fig. 3

1 Start EASY IP Setup Software.

2 Click [Search]. (Fig. 1)

3 Click the MAC address/IPv4 address of the camera to set, and then click [Network settings]. (Fig. 2)

- When there are overlapping IP addresses, overlapping camera numbers are displayed in the [Duplicate IPv4 address] field of the corresponding camera.

4 Enter each of the network setting items, and then click [Save]. (Fig. 3)

- The connection mode of the camera only supports [Fixed IP]. DHCP and other protocols are not supported. Do not specify these settings.
- Network setting from EASY IP Setup Software is not possible in the following cases:
  - When the [NETWORK] menu → [DEVICE SEL] → [USB TETHERING] is set
  - When the [NETWORK] menu → [DEVICE SEL] → [WLAN] is set and the [NETWORK] menu → [WLAN PROPERTY] → [TYPE] → [DIRECT] is set
- It may take approximately two minutes to complete the setting of the camera after clicking [Save].
  The settings become invalid if the AC adaptor, LAN cable, or wireless module is disconnected before the settings are complete. Specify the settings again.

NOTE

- The IP address assigned to the camera can be checked by clicking [Search] of EASY IP Setup Software when using the DHCP server.
- The camera does not support the IPv6 setting due to EASY IP Setup Software.
- Allow access to all of the ports for UDP when implementing a firewall (including software).
- Some of the items cannot be set on this camera.
- [View Camera Screen] displayed on Fig. 1 and Fig. 2 does not function on this camera.

Confirming the network status

The status of the camera network can be checked using the following operations.

1 Select the [NETWORK] menu → [INFORMATION] → [STATUS].

Checking the network environment

1 Select the [NETWORK] menu → [UTILITY] → [NET CHECKER].

2 Touch the [△]/[▽] as necessary to confirm the results.

NOTE

- It may take time to display the check results as connection with external equipment is checked.
- To cancel, touch the <EXIT> button or ↩.
- For details on the check results, contact the administrator of the network being used.

Saving the check results

Check results can be saved to a SD card as necessary.

1 Select [SAVE] when the check results are displayed.

A confirmation screen is displayed.

2 Select [SET].

The file is saved.

NOTE

- When a SD card is not inserted or is write-protected, [SAVE] cannot be selected.
- Save destination in the SD card and fixed file name are indicated below. File will be overwritten if there already is a file.
  ¥PRIVATE¥MEIGROUP¥PAVCN¥SBG¥P2SD¥netchk.txt

Connecting to the iPhone/iPad or Android terminal

The camera can be operated from the iPhone/iPad or Android terminal.

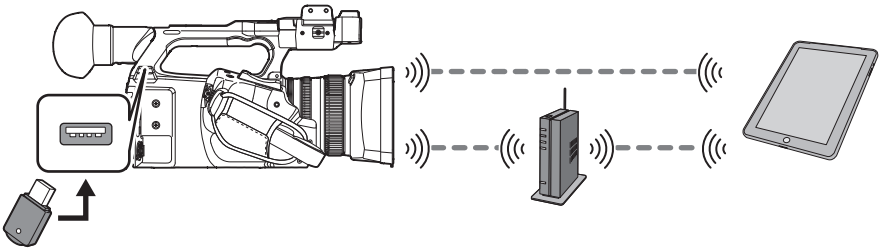

Mounting the wireless module

Mount the wireless module (optional) to the camera. (page 193)

Camera settings

Specifying the network settings

Specify the network settings. (page 194)

Setting the user account name and the password

1 Select the [NETWORK] menu → [IP REMOTE] → [USER ACCOUNT].

2 Enter the user account name and select [Enter].

- Enter the user account name with 31 characters or less.

3 Enter the password and select [Enter].

- Enter a password between 8 characters and 15 characters.

■ **To enter a character**

Operation is the same as entering with a keyboard.

Icon	Description of operation
[A-a]	Switches between upper case and lower case. (Displayed during the text entry mode)
[@-#]	Switches the type of the symbols. (Displayed during the symbol entry mode)
⮌	Returns to the previous screen. Entered character is not reflected.
123 #+=	Switches the character to symbol/number.
␣	Enters space (blank).
[BS]	Deletes the character. Previous character is deleted when the cursor position is empty.
◀/▶	Moves the cursor to right or left.
[Enter]	Completes the character entry.

Enabling the IP remote function

1 Select the [NETWORK] menu → [IP REMOTE] → [ENABLE/DISABLE] → [ENABLE].

Setting the standby port number

Depending on the environment, set the port number for standby if required.

1 Set the port number in the [NETWORK] menu → [IP REMOTE] → [CX ROP PORT].

NOTE

- The setting value is not reflected until the [NETWORK] menu → [IP REMOTE] → [ENABLE/DISABLE] is switched to [DISABLE] once, or when the camera is restarted.
- Number 80 and the same value as the port number set for other menu item cannot be specified.
- The TCP port set as the setting value and the UDP port set as the setting value +1 will be used.
- Inquire the administrator of the network or the device whether change is required.

Checking/deleting user accounts

1 Select the [NETWORK] menu → [IP REMOTE] → [ACCOUNT LIST].

The list of registered user accounts is displayed.

- Proceed to Step **3** to only check user accounts.

2 Select the user account to delete, and then select [SET].

A confirmation message appears.

3 Select ⮌ and end the operation.

Preparing the CX ROP app

Install the CX ROP app to the iPhone/iPad or Android terminal.

■ For iPhone/iPad

- Download the CX ROP app from the App Store.

■ For Android terminal

- Download the CX ROP app from the Google Play Store.

NOTE

- For information such as the supported OS of the CX ROP app, refer to the App Store or the Google Play Store download page.
- When using firmware of the camera Ver.4.00 or above, use the CX ROP app Ver.1.2.0 or above.

Connecting to the CX ROP application

Connect to the camera following the CX ROP app guide.

NOTE

- Change the connection destination port number in CX ROP app if the standby port number is changed in this camera.
- The camera cannot connect with the CX ROP app while the menu or thumbnail screen is displayed.

Operation while the CX ROP app is connected

■ Operation of the camera that is connected

Following buttons and dial cannot be used.

- <THUMBNAIL> button

■ Recording and playback operation while connected

- Recording can be operated by either the camera or the CX ROP app.
- Playback operation is not possible.

NOTE

- The content set with the remote operation using the CX ROP app is reflected to the camera. (Excluding setting by hard switch)

Connecting to the remote camera controller (AW-RP150G)

The camera can be operated from the remote camera controller AW-RP150G (optional).

Camera settings

For the firmware of the camera, use Ver.4.00 or above.

For details about the camera setting, refer to “Connecting to the iPhone/iPad or Android terminal” (page 200). According to the shooting environment, select [ENABLE] or [ENABLE(HOLD)] for the [NETWORK] menu → [IP REMOTE] → [ENABLE/DISABLE].

In addition, set the following:

- Switch to auto mode with the <AUTO/MANUAL> switch. (page 20)
- When [SUPER GAIN] is assigned to any of the USER button, clear the assignment. (page 126)

The following settings are also recommended.

- Select the [CAMERA] menu → [SW MODE] → [ATW] → [OFF]. (page 67)
- Select the [CAMERA] menu → [AUTO SW] → [ATW] → [OFF]. (page 69)
- Select the [CAMERA] menu → [AUTO SW] → [A.SHUTTER] → [OFF]. (page 69)
- Select the [CAMERA] menu → [AUTO SW] → [AGC] → [OFF]. (page 69)

NOTE

- When the [NETWORK] menu → [IP REMOTE] → [ENABLE/DISABLE] → [ENABLE(HOLD)] is selected, connection will be preserved even if disconnecting from the remote controller. Restrictions during connection such as the <THUMBNAIL> button not operating will remain.
  To end the connection status, select the [NETWORK] menu → [IP REMOTE] → [ENABLE/DISABLE] → [DISABLE].
- Network setting and setting related to IP remote for the camera will be reflected immediately after operating the menu. This may cause the connection between the camera and remote controller to end when changing settings.

Setting the standby port number

Depending on the environment, set the port number for standby if required.

1 Set the port number in the [NETWORK] menu → [IP REMOTE] → [REMOTE CONTROL PORT].

NOTE

- The setting value is not reflected until the [NETWORK] menu → [IP REMOTE] → [ENABLE/DISABLE] is switched to [DISABLE] once, or when the camera is restarted.
- Number 80 and the same value as the port number set for other menu item cannot be specified.
- Only the TCP port set as the setting value will be used.
- Inquire the administrator of the network or the controller whether change is required.

Remote camera controller AW-RP150G setting

For details about the AW-RP150G setting, refer to the Operating Guide for the remote camera controller AW-RP150G.

NOTE

- Following information about the camera is required to connect to the AW-RP150G.
  - User account name
  - Password
  - IP address
  - Port number: The value set in the [NETWORK] menu → [IP REMOTE] → [REMOTE CONTROL PORT]
- For the firmware of the AW-RP150G, use Ver.2.10-00-0.03 or above.
- For details about the ROP setup software operation, refer to the Operating Instructions for the AW-RP150G.
- For ROP setup software, use Ver.2.1.0.0 or above.

Operation during remote control

There are following restrictions when connected to a remote controller.

- Connection is not possible when displaying the thumbnail screen or during playback. In addition, <THUMBNAIL> button will not operate after connection.
- Connection is not possible when the menu is displayed. Menu can be operated after connection.

NOTE

- The content set with the remote operation is reflected to the setting value of the menu on the camera. However, remote operation for auto iris and auto focus will not be reflected to the setting value of the menu.
- After connection with the remote controller is ended, setting value of the menu on the camera will remain as the setting value used during connection. However, setting items of the hard switch will return the status of each switch.

Streaming function

You can perform streaming of audio and video currently shot with the camera over a network (wired LAN, wireless LAN, and USB tethering).

Streaming can be performed using the camera, an application software of a device connected via a network, or a server that is capable of receiving streaming video sent from the camera.

There are two ways to start streaming: streaming from an application software and streaming from the camera. This section describes the camera's network connection method for each method.

NOTE

- The streaming function cannot be simultaneously used with the recording function of the proxy data.
- Streaming stops when performing operations such as displaying the thumbnail screen or playing back clips on the camera.
- Streaming may stop when the date/time is set while streaming.
- If there is a setting that disables VFR and other streaming functions in the scene file, streaming will end due to the scene file changing.
- Take caution as streaming image may unintentionally be released depending on the system environment to stream on and setting of the service and system used.

Basic setting of the camera

Specifying the network settings

Specify the network settings. (page 194)

Settings for the streaming function

1 Set the [SYSTEM] menu → [FREQUENCY]/[REC FORMAT].

- For details about the setting items, refer to “Settings when using the streaming function” (page 204), “Settings when using the 4K streaming function” (page 204).

2 Select the [NETWORK] menu → [NETWORK FUNC] → [STREAMING] or [STREAMING(4K)].

Streaming function is enabled.

3 Select the protocol with the [NETWORK] menu → [STREAMING] → [STREAMING PROTOCOL].

4 In the [NETWORK] menu → [STREAMING] → [STREAMING FORMAT], set the format when streaming.

- For details about the setting items, refer to “Settings when using the streaming function” (page 204), “Settings when using the 4K streaming function” (page 204).

5 Set the setting corresponding to the selected protocol.

- For details on each protocol, refer to “Setting for each protocol and starting the streaming” (page 205).

NOTE

- The streaming function can be used when all of the following conditions are satisfied.
  - The [SYSTEM] menu → [FILE FORMAT] is set to anything other than [AVCHD]
  - The [SYSTEM] menu → [SUPER SLOW] → [OFF] is set
  - The menu has been set according to “Settings when using the streaming function” (page 204) (This cannot be used when set to UHD)
  - VFR and some special recording functions are disabled
  - The [RECORDING] menu → [PROXY SETTING] → [PROXY REC] → [OFF] is set
- Recording and displaying of the thumbnail are not possible when [STREAMING(4K)] is selected.
- The 4K streaming function can be used when all of the following conditions are satisfied.
  - The [SYSTEM] menu → [FILE FORMAT] is set to [MOV]
  - The [SYSTEM] menu → [SUPER SLOW] → [OFF] is set
  - The menu is set in accordance to “Settings when using the 4K streaming function” (page 204) (This cannot be used when set to anything other than UHD)
  - VFR and some special recording functions are disabled
- When the [SCENE FILE] menu → [GAMMA MODE SEL] is set to [HLG], video is streamed after converting from high dynamic range to standard dynamic range.
- When the [SYSTEM] menu → [COLOR SETTING] is set to [V-Log], video is streamed after converting from V-Log to V-709.

■ Settings when using the streaming function

The item that can be selected varies depending on the [STREAMING PROTOCOL] settings.

- For [SRT CLIENT] or [SRT LISTENER]: Only the steaming format with "*" in the table can be selected.

[SYSTEM] menu		[NETWORK] menu → [STREAMING]
[FREQUENCY]	[REC FORMAT]	[STREAMING FORMAT]
[59.94Hz]	[1080-59.94p/AVC-I100] [1080-59.94p/AVC-I422] [1080-59.94p/AVC-G25] [1080-59.94p/AVC-G12] [1080-59.94p/422LongGOP 100M] [1080-59.94p/422ALL-I 200M]	*[1920×1080-60fps 24M] *[1920×1080-60fps 20M] *[1920×1080-60fps 16M] *[1280×720-60fps 14M] *[1280×720-60fps 8M] *[1280×720-60fps 3M] [640×360-30fps 4M] [640×360-30fps 1.5M] [640×360-30fps 0.7M] (Factory setting) [320×180-30fps 4M] [320×180-30fps 1.5M] [320×180-30fps 0.5M]
	[1080-59.94i/AVC-I200] [1080-59.94i/AVC-I100] [1080-59.94i/AVC-I50] [1080-59.94i/AVC-G50] [1080-59.94i/AVC-G25] [1080-59.94i/AVC-G12] [1080-29.97p/422LongGOP 50M] [1080-29.97p/422ALL-I 100M] [1080-59.94i/422LongGOP 50M] [1080-59.94i/422ALL-I 100M]	*[1920×1080-30fps 14M] *[1920×1080-30fps 6M] *[1920×1080-30fps 1M] *[1280×720-30fps 8M] *[1280×720-30fps 2M] *[1280×720-30fps 1M] [640×360-30fps 4M] [640×360-30fps 1.5M] [640×360-30fps 0.7M] (Factory setting) [320×180-30fps 4M] [320×180-30fps 1.5M] [320×180-30fps 0.5M]
	[1080-23.98p/422LongGOP 50M] [1080-23.98p/422ALL-I 100M]	[1920×1080-24fps 14M] [1920×1080-24fps 6M] [1920×1080-24fps 1M] (Factory setting)
	[720-59.94p/AVC-I200] [720-59.94p/AVC-I100] [720-59.94p/AVC-I50] [720-59.94p/AVC-G50] [720-59.94p/AVC-G25] [720-59.94p/AVC-G12]	*[1280×720-60fps 14M] *[1280×720-60fps 8M] *[1280×720-60fps 3M] [640×360-30fps 4M] [640×360-30fps 1.5M] [640×360-30fps 0.7M] (Factory setting) [320×180-30fps 4M] [320×180-30fps 1.5M] [320×180-30fps 0.5M]
[50.00Hz]	[1080-50.00p/AVC-I100] [1080-50.00p/AVC-I422] [1080-50.00p/AVC-G25] [1080-50.00p/AVC-G12] [1080-50.00p/422LongGOP 100M] [1080-50.00p/422ALL-I 200M]	*[1920×1080-50fps 24M] *[1920×1080-50fps 20M] *[1920×1080-50fps 16M] *[1280×720-50fps 14M] *[1280×720-50fps 8M] *[1280×720-50fps 3M] [640×360-25fps 4M] [640×360-25fps 1.5M] [640×360-25fps 0.7M] (Factory setting) [320×180-25fps 4M] [320×180-25fps 1.5M] [320×180-25fps 0.5M]
	[1080-50.00i/AVC-I200] [1080-50.00i/AVC-I100] [1080-50.00i/AVC-I50] [1080-50.00i/AVC-G50] [1080-50.00i/AVC-G25] [1080-50.00i/AVC-G12] [1080-25.00p/422LongGOP 50M] [1080-25.00p/422ALL-I 100M] [1080-50.00i/422LongGOP 50M] [1080-50.00i/422ALL-I 100M]	*[1920×1080-25fps 14M] *[1920×1080-25fps 6M] *[1920×1080-25fps 1M] *[1280×720-25fps 8M] *[1280×720-25fps 2M] *[1280×720-25fps 1M] [640×360-25fps 4M] [640×360-25fps 1.5M] [640×360-25fps 0.7M] (Factory setting) [320×180-25fps 4M] [320×180-25fps 1.5M] [320×180-25fps 0.5M]
	[720-50.00p/AVC-I200] [720-50.00p/AVC-I100] [720-50.00p/AVC-I50] [720-50.00p/AVC-G50] [720-50.00p/AVC-G25] [720-50.00p/AVC-G12]	*[1280×720-50fps 14M] *[1280×720-50fps 8M] *[1280×720-50fps 3M] [640×360-25fps 4M] [640×360-25fps 1.5M] [640×360-25fps 0.7M] (Factory setting) [320×180-25fps 4M] [320×180-25fps 1.5M] [320×180-25fps 0.5M]

■ Settings when using the 4K streaming function

- The item that can be selected varies depending on the [STREAMING PROTOCOL] settings.
  - For [SRT CLIENT] or [SRT LISTENER]: The recording format/streaming format starting with 2160-23.98p is not supported.

- For [RTMP(S)]: The streaming format starting with H.265 is not supported.

● When using RTMPS or when SRT encryption is enabled, only the streaming format equal to or less than 25 Mbps can be selected.

[SYSTEM] menu		[NETWORK] menu → [STREAMING]
[FREQUENCY]	[REC FORMAT]	[STREAMING FORMAT]
[59.94Hz]	[2160-59.94p/420LongGOP 150M] [2160-59.94p/HEVC LongGOP 200M] [2160-59.94p/HEVC LongGOP 100M]	[H.265_3840×2160-60fps 75M] [H.265_3840×2160-60fps 50M] [H.265_3840×2160-60fps 25M] [H.265_3840×2160-60fps 12M] [H.265_3840×2160-60fps 8M] [H.264_3840×2160-60fps 75M] [H.264_3840×2160-60fps 50M] [H.264_3840×2160-60fps 25M] [H.264_3840×2160-60fps 12M] (Factory setting)
	[2160-29.97p/420LongGOP 100M] [2160-29.97p/HEVC LongGOP 150M] [2160-29.97p/422LongGOP 150M] [2160-29.97p/422ALL-I 400M]	[H.265_3840×2160-30fps 75M] [H.265_3840×2160-30fps 50M] [H.265_3840×2160-30fps 25M] [H.265_3840×2160-30fps 12M] [H.265_3840×2160-30fps 8M] [H.264_3840×2160-30fps 75M] [H.264_3840×2160-30fps 50M] [H.264_3840×2160-30fps 25M] [H.264_3840×2160-30fps 12M] (Factory setting)
	[2160-23.98p/420LongGOP 100M] [2160-23.98p/HEVC LongGOP 150M] [2160-23.98p/422LongGOP 150M] [2160-23.98p/422ALL-I 400M]	[H.265_3840×2160-24fps 75M] [H.265_3840×2160-24fps 50M] [H.265_3840×2160-24fps 25M] [H.265_3840×2160-24fps 12M] [H.265_3840×2160-24fps 8M] [H.264_3840×2160-24fps 75M] [H.264_3840×2160-24fps 50M] [H.264_3840×2160-24fps 25M] [H.264_3840×2160-24fps 12M] (Factory setting)
[50.00Hz]	[2160-50.00p/420LongGOP 150M] [2160-50.00p/HEVC LongGOP 200M] [2160-50.00p/HEVC LongGOP 100M]	[H.265_3840×2160-50fps 75M] [H.265_3840×2160-50fps 50M] [H.265_3840×2160-50fps 25M] [H.265_3840×2160-50fps 12M] [H.265_3840×2160-50fps 8M] [H.264_3840×2160-50fps 75M] [H.264_3840×2160-50fps 50M] [H.264_3840×2160-50fps 25M] [H.264_3840×2160-50fps 12M] (Factory setting)
	[2160-25.00p/420LongGOP 100M] [2160-25.00p/HEVC LongGOP 150M] [2160-25.00p/422LongGOP 150M] [2160-25.00p/422ALL-I 400M]	[H.265_3840×2160-25fps 75M] [H.265_3840×2160-25fps 50M] [H.265_3840×2160-25fps 25M] [H.265_3840×2160-25fps 12M] [H.265_3840×2160-25fps 8M] [H.264_3840×2160-25fps 75M] [H.264_3840×2160-25fps 50M] [H.264_3840×2160-25fps 25M] [H.264_3840×2160-25fps 12M] (Factory setting)

Setting for each protocol and starting the streaming

RTMP(S)

1 Select the [NETWORK] menu → [STREAMING] → [STREAMING PROTOCOL] → [RTMP(S)].

2 Set the destination.

For details of setting the streaming destination, refer to “Setting of the destination” (page 207).

3 Select the [NETWORK] menu → [STREAMING] → [START] → [ON].

If the camera is connected to the transmission destination through a network, the camera starts the transmission of streaming video.

● To stop the transmission of the streaming image, select the [NETWORK] menu → [STREAMING] → [START] → [OFF].

NOTE

- The H.265 format cannot be selected in the 4K streaming.
- [START] menu cannot be selected when the streaming cannot be started due to reasons such as the network is not connected, etc.
- Starting/stopping of the streaming from the camera can be assigned to the USER button. (page 51)
  Streaming cannot be started by pressing the USER button or touching the USER button icon when the menu or the thumbnail screen is displayed.
- IPv6 cannot be used for RTMP(S).
- For settings such as URL, refer to the manual for each streaming service.
- Streaming may not be possible depending on the operating condition of the streaming service.
- Setting of [RECEIVER URL] is not possible when [DATA TYPE] is set to [CLOUD]. Set this after performing the operation for [CLEAR (MEMORY)] once.

RTSP

Start the streaming with an operation of the application software or device at the receiving side (referred to as “receiving side” hereinafter).

1 Select the [NETWORK] menu → [STREAMING] → [STREAMING PROTOCOL] → [RTSP].

2 Set the standby port with the [NETWORK] menu → [STREAMING] → [RTSP SETTING] → [PORT] on the camera if required.

3 Specify the IP address and the path of the camera as following on the receiving side, and start streaming.

rtsp://(IP address):(Port number)/stream

NOTE

- Stop the streaming with the operation in the receiving side.
- For details about the operations to start streaming from the application software, refer to the manual for the receiving side.
- Streaming cannot be started while the thumbnail screen is displayed.

■ Streaming with multicast

One streaming can be distributed to multiple receivers via supported router, etc., when the multicast function is used.

1 Select the [NETWORK] menu → [STREAMING] → [RTSP SETTING] → [MULTICAST] → [ENABLE].

2 Select the [NETWORK] menu → [STREAMING], and specify [MULTICAST ADDRESS] and [MULTICAST PORT].

- Set [MULTICAST ADDRESS] within following range.
  IPv4: 224.0.1.0 to 239.255.255.254
  IPv6: Multicast address starting with FF
- Set [MULTICAST PORT] within the range of 1024 to 50000.

3 Specify the address of the camera and start streaming with the application software.

NOTE

- Depending on the specification of the device receiving streaming and the connected router, quality of the video image may not be preserved. When streaming by multicast, contact the administrator of the network being used and prepare appropriate communication environment.
- Disable the LAN card not to be used when receiving the multicast image to be displayed on a computer with multiple LAN cards installed.
- Range of streaming can be adjusted with the [NETWORK] menu → [STREAMING] → [RTSP SETTING] → [TTL/HOP LIMIT]. For details, contact the network administrator.

SRT client

1 Select the [NETWORK] menu → [STREAMING] → [STREAMING PROTOCOL] → [SRT CLIENT].

2 Set the destination.

For details of setting the streaming destination, refer to “Setting of the destination” (page 207).

3 Select the [NETWORK] menu → [STREAMING] → [START] → [ON].

If the camera is connected to the transmission destination through a network, the camera starts the transmission of streaming video.

- To stop the transmission of the streaming image, select the [NETWORK] menu → [STREAMING] → [START] → [OFF].

NOTE

- Streaming in 23.98 Hz is not possible with SRT.
- [START] menu cannot be selected when the streaming cannot be started due to reasons such as the network is not connected, etc.
- Starting/stopping of the streaming from the camera can be assigned to the USER button. (page 51)
- Streaming cannot be started by pressing the USER button or touching the USER button icon when the menu or the thumbnail screen is displayed.
- For settings such as URL, refer to the manual for each streaming service.
- Streaming may not be possible depending on the operating condition of the streaming service.
- Range of streaming can be adjusted with the [NETWORK] menu → [STREAMING] → [SRT SETTING] → [TTL/HOP LIMIT]. For details, contact the network administrator.
- Depending on the environment, the delay time can be adjusted with the [NETWORK] menu → [STREAMING] → [SRT SETTING] → [LATENCY]. For details, contact the network administrator.
- Settings of [DEST URL], [STREAM ID], [ENCRYPTION], and [PASSPHRASE] are not possible when [DATA TYPE] is set to [CLOUD]. Set this after performing the operation for [CLEAR (MEMORY)] once.

SRT listener

Start the streaming with an operation of the application software or device at the receiving side (referred to as “receiving side” hereinafter).

1 Select the [NETWORK] menu → [STREAMING] → [STREAMING PROTOCOL] → [SRT LISTENER].

2 Set following items with the [NETWORK] menu → [STREAMING] → [SRT SETTING] on the camera.

- Set the standby port with [PORT].
- If the streaming data is to be encrypted, select the encryption method in [ENCRYPTION], and enter the passphrase in [PASSPHRASE].

3 Specify the IP address and the stream ID of the camera as following on the receiving side, and start streaming.

srt://(IP address):(Port number)

- The stream ID is fixed to following value in the SRT listener mode.
  #!::m=publish,r=PanasonicStream

NOTE

- Streaming in 23.98 Hz is not possible with SRT.
- Stop the streaming with the operation in the receiving side.
- For details about the operations to start streaming from the application software, refer to the manual for each application software.
- Range of streaming can be adjusted with the [NETWORK] menu → [STREAMING] → [SRT SETTING] → [TTL/HOP LIMIT]. For details, contact the network administrator.
- Depending on the environment, the delay time can be adjusted with the [NETWORK] menu → [STREAMING] → [SRT SETTING] → [LATENCY]. For details, contact the network administrator.
- Streaming cannot be started while the thumbnail screen is displayed.

Management of setting information

Setting of the destination

Information regarding the destination can be set or referenced.

Setting the destination with the camera menu

■ **For RTMP(S)**

1 Select the [NETWORK] menu → [STREAMING] → [CONNECTION INFO.] → [MEMORY].

2 Enter the destination URL in the [NETWORK] menu → [STREAMING] → [RTMP(S) RECEIVER URL].

- Enter the destination URL in following format.
  - rtmp://(server URL):(port number)/(path)/(stream key)
  - rtmps://(server URL):(port number)/(path)/(stream key)

NOTE

- In general, a parameter for the stream key is required for URL, but the stream key may be contained as a part of the path depending on the service. For details, refer to the manual for each streaming service.
- When using RTMPS, only the streaming format equal to or less than 25 Mbps can be selected.

■ **For SRT client**

1 Select the [NETWORK] menu → [STREAMING] → [CONNECTION INFO.] → [MEMORY].

2 Set following items with the [NETWORK] menu → [STREAMING] → [SRT SETTING].

- Enter the destination URL in [DEST URL] in following format.
  srt://(server URL):(Port number)/(Path)
- Enter the stream ID in [STREAM ID].
- If the streaming data is to be encrypted, select the encryption method in [ENCRYPTION], and enter the passphrase in [PASSPHRASE].

NOTE

- In general, a parameter for the stream ID is required for URL, but the stream ID may be contained as a part of the path depending on the service. For details, refer to the manual for each streaming service.
- When the SRT encryption is enabled, only the streaming format equal to or less than 25 Mbps can be selected.
- When the passphrase is blank, communication is performed without encryption even if [ENCRYPTION] is set to anything other than [OFF].

Referencing destination from the memory card

1 Insert the memory card with the destination information saved.

- The card slot to perform loading and saving can be set in the [OTHERS] menu → [FILE] → [SLOT FOR LOAD/SAVE].

2 Select the [NETWORK] menu → [STREAMING] → [CONNECTION INFO.] → [SD CARD].

NOTE

- If the setting information in the memory card is not information for the selected protocol or the cloud, it will be treated as no setting.

Saving the destination information on the memory card

1 Insert a memory card formatted with the camera.

- The card slot to perform loading and saving can be set in the [OTHERS] menu → [FILE] → [SLOT FOR LOAD/SAVE].

2 Select the [NETWORK] menu → [STREAMING] → [SAVE (SD CARD)].

3 Select [YES] when the confirmation message is displayed.

NOTE

- Only items saved are the ones that are used in the destination setting.
- The name of the file in the memory card to save the destination information cannot be changed.
- The file with the destination information saved on the memory card is encrypted.
- Only the selected protocol settings are saved if the protocol is RTMP(S) or SRT client.
- Save is not possible when [DATA TYPE] is set to [CLOUD].
- Save is not possible when the starting character string of the [RECEIVER URL] or the [DEST URL] (“rtmp://”, etc.) is not set correctly.

Loading destination information from the memory card

1 Insert the memory card with the destination information saved.

- The card slot to perform loading and saving can be set in the [OTHERS] menu → [FILE] → [SLOT FOR LOAD/SAVE].

2 Select the [NETWORK] menu → [STREAMING] → [LOAD (SD CARD)].

3 Select [YES] when the confirmation message is displayed.

NOTE

- The name of the file to load destination information saved on the memory card cannot be selected.
- The setting information that can be loaded (referenced) by the camera is as follows.
  - Information saved with the camera
  - Setting file created with the P2 Network Setting software (page 208)
  - Profile downloaded from the cloud service (page 212)

Clearing the destination information

1 Select the [NETWORK] menu → [STREAMING] → [CLEAR (MEMORY)].

- The setting information for the cloud service is also cleared.
- The destination URL information set in the cloud service is also cleared. (page 212)

Stopping streaming of video

Stop the streaming in following procedure if the streaming was started with the operation of the camera.

1 Select the [NETWORK] menu → [STREAMING] → [START] → [OFF].

- If a start/stop of streaming is assigned to a USER button, streaming can also be stopped with the USER button.

Entering the setting using the setting tool

Installing software

Download and expand the P2 Network Setting software for Windows from the following website.
https://pro-av.panasonic.net/

Creating the SD card for setting using the P2 Network Setting software

The SD card created with this software can be used to load into the camera menu or as the reference destination when the [NETWORK] menu → [STREAMING] → [CONNECTION INFO.] → [SD CARD] is selected.

RTMP(S) setting procedure

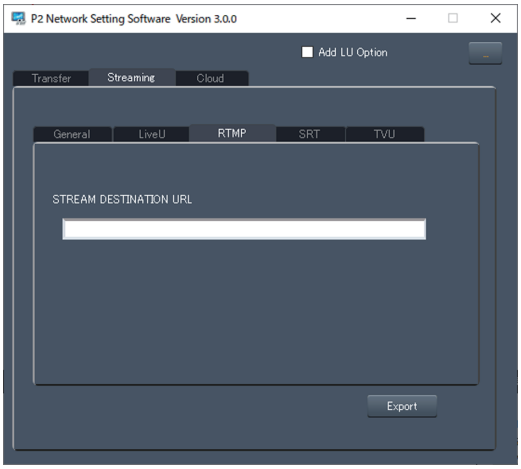

Fig. 1

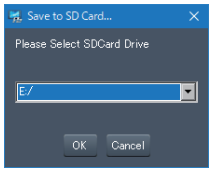

Fig. 2

1 Start the P2 Network Setting software. (Fig. 1)

2 Select the Streaming tab → RTMP tab.

3 Enter the destination URL in STREAM DESTINATION URL.

4 Click Export and select the destination in the drive selection dialog (Fig. 2), and then click OK.

- This cannot be saved to anything other than a removable drive.

SRT client setting procedure

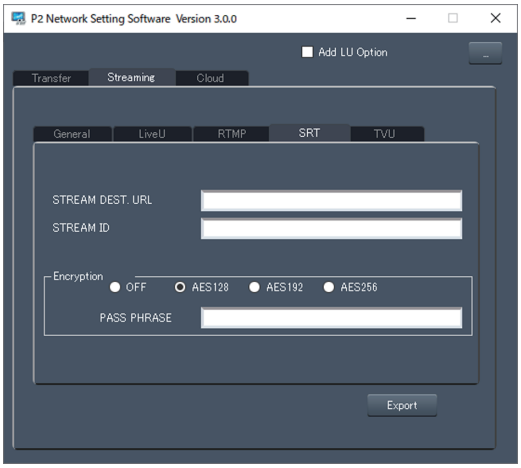

Fig. 1

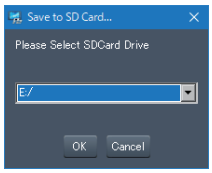

Fig. 2

1 **Start the P2 Network Setting software. (Fig. 1)**

2 **Select the Streaming tab → SRT tab.**

3 **Enter the destination URL in STREAM DEST. URL.**

4 **Enter the stream ID in STREAM ID.**

5 **To encrypt, select Encryption and enter the PASS PHRASE.**

6 **Click Export and select the destination in the drive selection dialog (Fig. 2), and then click OK.**

- This cannot be saved to anything other than a removable drive.

NOTE

- When setting the SRT client, use the P2 Network Setting software Ver.3.00 or later.

NDI|HX function

The camera can be connected to a NDI|HX compatible switches made by NewTek.

NOTE

- For details of each operation, refer to the operating instruction of the NDI|HX compatible switcher.
- The following functions cannot be used when the NDI|HX function is enabled. Some of the menu items related to those functions cannot be selected as well.
  - Recording function
  - Functions of the playback system including the thumbnail display
  - Wireless LAN
  - USB tethering

Camera settings

Specifying the network settings

Sets the wired LAN setting. (page 195)

Setting for the NDI|HX function

1 Set the [SYSTEM] menu → [FREQUENCY]/[REC FORMAT].

- For details about the setting items, refer to “Settings when using the NDI|HX function” (page 210).

2 Select the [NETWORK] menu → [NETWORK FUNC] → [NDI|HX].

The NDI|HX function is selected. The camera will automatically restart.

3 Set the streaming format with the [NETWORK] menu → [NDI|HX] → [STREAMING FORMAT].

This cannot be used when set to UHD.

NOTE

- The NDI|HX function can be used when all of the following conditions are satisfied.
  - The [SYSTEM] menu → [FILE FORMAT] is set to anything other than [AVCHD]
  - The [SYSTEM] menu → [SUPER SLOW] → [OFF] is set
  - The menu has been set according to “Settings when using the NDI|HX function” (page 210)
  - VFR and some special recording functions are disabled
- The [NETWORK] menu → [UTILITY] → [EASY IP SETTING] is switched to [UNLIMITED] when the NDI|HX function is enabled.
- When the [SCENE FILE] menu → [GAMMA MODE SEL] is set to [HLG], video is streamed after converting from high dynamic range to standard dynamic range.
- When the [SYSTEM] menu → [COLOR SETTING] is set to [V-Log], video is streamed after converting from V-Log to V-709.

■ **Settings when using the NDI|HX function**

[SYSTEM] menu		[NETWORK] menu → [NDI|HX]
[FREQUENCY]	**[REC FORMAT]**	**[STREAMING FORMAT]**
[59.94Hz]	[1080-59.94p/AVC-I100] [1080-59.94p/AVC-I422] [1080-59.94p/AVC-G25] [1080-59.94p/AVC-G12] [1080-59.94p/422LongGOP 100M] [1080-59.94p/422ALL-I 200M]	[1920×1080-60fps 24M] [1920×1080-60fps 16M] [1920×1080-60fps 10M] (Factory setting) [1920×1080-60fps 8M] [1280×720-60fps 14M] [1280×720-60fps 10M] [1280×720-60fps 6M]
	[1080-59.94i/AVC-I200] [1080-59.94i/AVC-I100] [1080-59.94i/AVC-I50] [1080-59.94i/AVC-G50] [1080-59.94i/AVC-G25] [1080-59.94i/AVC-G12] [1080-29.97p/422LongGOP 50M] [1080-29.97p/422ALL-I 100M] [1080-59.94i/422LongGOP 50M] [1080-59.94i/422ALL-I 100M]	[1920×1080-30fps 14M] [1920×1080-30fps 10M] (Factory setting) [1920×1080-30fps 6M] [1280×720-30fps 8M] [1280×720-30fps 4M] [1280×720-30fps 2M]
	[720-59.94p/AVC-I200] [720-59.94p/AVC-I100] [720-59.94p/AVC-I50] [720-59.94p/AVC-G50] [720-59.94p/AVC-G25] [720-59.94p/AVC-G12]	[1280×720-60fps 14M] [1280×720-60fps 10M] (Factory setting) [1280×720-60fps 6M]
[50.00Hz]	[1080-50.00p/AVC-I100] [1080-50.00p/AVC-I422] [1080-50.00p/AVC-G25] [1080-50.00p/AVC-G12] [1080-50.00p/422LongGOP 100M] [1080-50.00p/422ALL-I 200M]	[1920×1080-50fps 24M] [1920×1080-50fps 16M] [1920×1080-50fps 10M] (Factory setting) [1920×1080-50fps 8M] [1280×720-50fps 14M] [1280×720-50fps 10M] [1280×720-50fps 6M]

[SYSTEM] menu		[NETWORK] menu → [NDI|HX]
[FREQUENCY]	[REC FORMAT]	[STREAMING FORMAT]
	[1080-50.00i/AVC-I200] [1080-50.00i/AVC-I100] [1080-50.00i/AVC-I50] [1080-50.00i/AVC-G50] [1080-50.00i/AVC-G25] [1080-50.00i/AVC-G12] [1080-25.00p/422LongGOP 50M] [1080-25.00p/422ALL-I 100M] [1080-50.00i/422LongGOP 50M] [1080-50.00i/422ALL-I 100M]	[1920×1080-25fps 14M] [1920×1080-25fps 10M] (Factory setting) [1920×1080-25fps 6M] [1280×720-25fps 8M] [1280×720-25fps 4M] [1280×720-25fps 2M]
	[720-50.00p/AVC-I200] [720-50.00p/AVC-I100] [720-50.00p/AVC-I50] [720-50.00p/AVC-G50] [720-50.00p/AVC-G25] [720-50.00p/AVC-G12]	[1280×720-50fps 14M] [1280×720-50fps 10M] (Factory setting) [1280×720-50fps 6M]

Streaming with multicast

One streaming can be distributed to multiple NDI|HX compatible switchers via supported router, etc., when the multicast function is used.

1 Select the [NETWORK] menu → [NDI|HX] → [MULTICAST] → [ENABLE].

2 Select the [NETWORK] menu → [NDI|HX], and specify [MULTICAST ADDRESS] and [MULTICAST PORT].

- Set [MULTICAST ADDRESS] within following range.
  IPv4: 224.0.1.0 to 239.255.255.254
  IPv6: Multicast address starting with FF
- Set [MULTICAST PORT] within the range of 1024 to 50000.

NOTE

- One that has added + 1 to the end of the specified multicast address is also used for NDI|HX.
- Disable the LAN card not to be used when receiving the multicast image to be displayed on a computer with multiple LAN cards installed.
- Range of streaming can be adjusted with the [NETWORK] menu → [STREAMING] → [NDI|HX] → [TTL/HOP LIMIT]. For details, contact the network administrator.

Using the NDI|HX function

Control the camera by operating the NDI|HX compatible switcher.

NOTE

- Streaming may stop when the date/time is set while streaming.
- Take caution as streaming image may unintentionally be released depending on the system environment to stream on and setting of the service and system used.

Using the cloud service

■ Panasonic cloud service

Following functions can be performed on the camera operating in the remote location by using the Panasonic cloud service.

- Remote operation to start the streaming
- Uploading of the contents
- Confirming the device status, device management operation
- Addition of camera metadata
- Import/export of the setup file
- Remote version update operation

For details, refer to the following website.

https://pro-av.panasonic.net/

NOTE

- A contract is required to use the cloud service. For details, consult your dealer.
- Some of the functions of the cloud service cannot be used with this camera.
- There are some functions that cannot be used depending on the cloud service server being used.

Remote operation of the streaming

Procedure for using

1 Perform the basic setting of the camera.

For details, refer to “Basic setting of the camera” (page 203).

2 Create an SD card with a profile set in following procedure using a computer.

- Login to the cloud service, and download the profile.
- Decompress the downloaded file.
- Save the decompressed PRIVATE folder in the root directory of the SD card.

3 Set the camera as follows to enable the profile.

- Select the [NETWORK] menu → [STREAMING] → [STREAMING PROTOCOL] → [RTMP(S)] or [SRT CLIENT].
- Insert an SD card, and load the profile into the camera with one of the following methods.
  (The card slot to load and save can be set with the [OTHERS] menu → [FILE] → [SLOT FOR LOAD/SAVE])
  - Select the [NETWORK] menu → [STREAMING] → [CONNECTION INFO.] → [MEMORY], and load the content of the SD card with the [NETWORK] menu → [STREAMING] → [LOAD (SD CARD)].
  - Select the [NETWORK] menu → [STREAMING] → [CONNECTION INFO.] → [SD CARD].
- Confirm that the [NETWORK] menu → [STREAMING] → [DATA TYPE] → [CLOUD] is displayed.

4 Perform various operation for streaming in the cloud service.

Streaming from the cloud service

- For details, refer to the cloud service documents.
- When the profile for the cloud service different from the contents upload function is set, the profile setting for the contents upload will be prioritized.
- It is necessary to set the camera to be able to use the streaming function. For details, refer to “Settings for the streaming function” (page 203).
- The items that can be specified from the cloud service are items set in the destination setting (page 207). Set other items in the menu of the camera.
- This function cannot be used if anything other than [RTMP(S)] or [SRT CLIENT] is selected in the streaming protocol.
- Remote operation of the streaming is not possible when the thumbnail screen is displayed on the camera.
- Once the operation to start streaming or setting of the destination URL is performed from the cloud service, the destination URL is recorded inside the camera. Streaming to the same destination can be performed with the operation from the camera after that. (page 205)
- The recorded streaming information can be confirmed in the [NETWORK] menu → [INFORMATION] → [STATUS]. (Except [PASSPHRASE])
- The recorded destination URL information is also cleared when the destination information is cleared.
  For details on clearing the destination information, refer to “Clearing the destination information” (page 208).

Contents upload

Procedure for using

1 Perform the network settings with the camera. (page 194)

2 Create an SD card with a profile set in following procedure using a computer.

- Login to the cloud service, and download the profile.
- Decompress the downloaded file.
- Save the decompressed PRIVATE folder in the root directory of the SD card.

3 Set the camera as follows to enable the profile.

- Select the [NETWORK] menu → [UPLOAD] → [ENABLE/DISABLE] → [ENABLE].

- Insert an SD card, and load the profile into the camera with one of the following methods.
  (The card slot to load and save can be set with the [OTHERS] menu → [FILE] → [SLOT FOR LOAD/SAVE])
  - Select the [NETWORK] menu → [UPLOAD] → [CONNECTION INFO.] → [MEMORY], and load the content of the SD card with the [NETWORK] menu → [UPLOAD] → [LOAD (SD CARD)].
  - Select the [NETWORK] menu → [UPLOAD] → [CONNECTION INFO.] → [SD CARD].
- Confirm that the [NETWORK] menu → [UPLOAD] → [DATA TYPE] → [CLOUD] is displayed.

4 Perform the setting and operation necessary for uploading with the cloud service.

Uploading of the contents with the cloud service

- To use the contents upload function, linking to a cloud service is necessary.
- For details, refer to the cloud service documents.
- The camera supports FTP/SFTP protocol. Set it on the cloud service depending on the server to be used.
- The recording data in AVCHD is not supported for uploading.
- Setting only the clips with shot marks added (page 147) as upload target is possible by the operation in the cloud service for the P2 recording data.
- Operation to only upload the proxy data (page 148) can be set by the operation in the cloud service for the P2 recording data. When only the proxy data is uploaded and then upload the main material recording data by selecting them in the cloud service, set to the [RECORDING] menu → [REC META DATA] → [CARD SERIAL] → [ON] before recording. Also, use the SD cards that do not have duplicated card serial number.
- Operations such as deleting the clip or formatting the memory card while uploading a clip may result in failure of the operation or incomplete upload.
- Connection may not be possible depending on the encryption algorithm setting of the server when SFTP is used.
- The upload operation may be paused when the SD card access load is high due to the recording operation, etc.

Other operations

Procedure for using

1 Perform the cloud service setting on the camera.

- Refer to “Remote operation of the streaming” (page 212) or “Contents upload” (page 212).

2 Perform various operations with the cloud service.

Various operations with the cloud service

Following operations can be performed in addition to above mentioned functions when the cloud service is used. For details, refer to the cloud service documents. Some of the functions may be restricted depending on the operation status such as recording, playing back, displaying the menu screen or the thumbnail screen, etc.

- Confirming the device status
- Import/export of the setup file
- Updating the firmware remotely
- Setting the REC metadata

Chapter 10 Notes

Maintenance of the camera or frequently asked questions are described.

Frequently asked questions

Power supply

■ What is the power supply voltage supported by the supplied AC adaptor?

- AC 100 V-240 V

■ Can the supplied AC adaptor used while the battery is mounted?

- It can be used. Supplying of the power is automatically switched to the AC adaptor side when the power is set to < | > (ON) and the AC adaptor is connected while the battery is mounted.
  The power status display in the LCD monitor will change from the mark to the mark.

■ The camera cannot be operated even when the power is set to < | > (ON).

- Remove the power supply (the battery or the AC adaptor), and connect it again after approximately one minute.

Battery

■ The battery gets exhausted quickly, so is there any way to improve?

- Charge the battery sufficiently.
- The operating time becomes shorter in low temperature.
- If the time is short after sufficient charging, the battery life has expired.

■ Can the battery that was used in the previous models used?

- VW-VBD58 (optional) can be used.
  It is recommended to use the following Panasonic genuine batteries.
  - AG-VBR59 (supplied/optional, 7.28 V, 5900 mAh)
  - AG-VBR89 (optional, 7.28 V, 8850 mAh)
  - AG-VBR118 (optional, 7.28 V, 11800 mAh)

■ Can the supplied battery be charged with the battery charger AG-B23 (DE-A88) (optional)?

- It can perform normal charging. It cannot perform quick charging.

Battery charger

■ Can the previous battery charged with the supplied charger?

- It can perform normal charging.
- To perform quick charging, use the quick charging compatible battery. The camera is compatible to following quick charging compatible batteries.
  - AG-VBR59 (supplied/optional, 7.28 V, 5900 mAh)
  - AG-VBR89 (optional, 7.28 V, 8850 mAh)
  - AG-VBR118 (optional, 7.28 V, 11800 mAh)

Memory card

■ Operation is not accepted even when a memory card is inserted into the card slot.

- The memory card to use with the camera should always be formatted on the camera.
  The memory card formatted on a computer cannot be used in the camera.

Shooting

■ The focus is not adjusted automatically.

- Is the manual focus mode set? Set the auto focus mode to adjust the focus automatically.
- Are you shooting in conditions which focusing is difficult with the auto focus mode? Auto focus has trouble focusing under certain conditions. In this case, the manual focus mode can be used to focus the camera.
  Under following conditions, focus may not be adjusted properly:
  - Shooting subjects that is in long and short distances at the same time
  - Shooting a subject through a dirty glass
  - Shooting in a dark place
  - With a glittering object nearby
  - Shooting a fast-moving subject
  - Shooting a low contrast subject

■ The shooting stops by itself, and cannot shoot.

- Use the SDXC memory card, the microP2 card B series or the 64 GB microP2 card A series when the recording format is set to MOV format. The camera cannot record data in MOV format to the SDHC memory card or the 32 GB microP2 card A series.
- Use the memory card with the required Speed Class in accordance with the recording bit rate. (page 39)

■ Audio cannot be recorded.

- Audio cannot be recorded in the following cases.
  - When the variable frame rate recording function is enabled, and the frame rate is set different from the system frequency

- When the super slow recording function is enabled
- When the interval recording function is enabled

- A.REC is displayed in the camera image screen when audio cannot be recorded.

Playback

■ The clip cannot be played back.

- The clip displaying ! in the thumbnail screen cannot be played back.
  ! is displayed on following clips.
  - A clip shot with other device, a clip edited by an editing software
  - Corrupted clip
- ▷⃠ is displayed on the clip in the thumbnail screen for the clips with different system frequency. Change the system frequency.
- The clip with different recording file format (P2/MOV/AVCHD) is not displayed in the thumbnail screen. Change the recording file format.

■ The clip cannot be erased.

- Cancel the protect on the clip.
- The clip displaying ! in the thumbnail screen may not be able to erase.
  Format the memory card if the clip is unnecessary.
  All the data recorded on the memory will be erased when formatted. Save the necessary data into a computer, etc.

■ Can the contents shot with AG-DVX200 or AG-UX180 be played back?

- The contents recorded in MOV format/MP4 format cannot be played back.
- The contents recorded in AVCHD format can be played back. Contents recorded in the format that cannot be recorded with the camera cannot be played back.

■ Hot swap playback cannot be performed.

- This camera does not support hot swap playback.

Others

■ The memory card is not recognized.

- Is the memory card formatted correctly? Format the card with the camera.

■ The camera clatters when tilted forward/backward.

- When the power switch is set to < ⏻ > (standby), the camera may clatter due to the camera part mechanism. This is not a malfunction.

■ A short click sound occurs when the power is turned on.

- This is an initial operation of the startup of the lens of the camera. This is due to the camera mechanism and is not a malfunction.

■ Which lens filter can be attached?

- 67 mm diameter filter can be attached.

■ Can the wired remote control used with AG-DVX200 series be used?

- The controlling format is different, so it cannot be used.

Warning system

When an error is detected right after the camera is turned on or during the operation, the occurrence of the error is notified in the camera image screen of the LCD monitor or by the tally lamp. Deal with the error by following the indications.

Cases indicated by error messages

System error

Screen display Camera image screen	Description	Behavior and cause
[SYSTEM ERROR]	An error in the standard signal or communication error has occurred.	All the tally lamps and the card access lamps (orange) will flash four times a second, and an alarm is sounded. • Set the power to < ⏻ > (standby).

Warning

Screen display Camera image screen	Description	Behavior and cause
[LOW BATTERY]	Remaining battery level is insufficient.	All the tally lamps and the card access lamps (orange) will flash four times a second, and an alarm is sounded. The power status display becomes ▭, and it will flash once every second in red. • The power is turned off in approximately five seconds. • Replace with a fully charged battery, or connect the AC adaptor.
[HIGH TEMPERATURE]	Displayed when the internal temperature of the camera has risen above assumed.	All the tally lamps and the card access lamps (orange) will flash four times a second, and an alarm is sounded. • The power is turned off in approximately five seconds. • Turn on the power again and check recording and playback operations. If the problem persists, consult the dealer.
[REC WARNING]	An error of the recording data has occurred during recording, and the recording has stopped.	All the tally lamps and the card access lamps (orange) will flash four times a second, and an alarm is sounded. • Recording is stopped.
	It has tried to record exceeding the maximum number of clips during recording.	All the tally lamps and the card access lamps (orange) will flash four times a second, and an alarm is sounded. • Recording is stopped. • [REC WARNING] [<OVER MAX NUM. OF CLIPS>] is displayed in the warning display field of the STATUS screen for the mode check. • Replace the memory card or delete unnecessary clips.
	This is displayed after approximately 3.5 hours have elapsed from the point of starting a single recording when [SHORT SPLIT] is selected in the [RECORDING] menu → [FILE SPLIT].	
[CARD ERROR <SLOT 1>]/[CARD ERROR <SLOT 2>]	A data error caused by the memory card has occurred during recording or playback.	• When it was recording All the tally lamps and the card access lamps (orange) will flash four times a second, and an alarm is sounded. Recording is stopped. The memory card where the error has occurred is write protected after recording stops. Replace the memory card in the card slot where the error has occurred. • When it was playing back Playback is stopped.
[END] (Memory card status display)	The remaining recording capacity of the memory card has exhausted during recording.	All the tally lamps and the card access lamps (orange) will flash four times a second, and an alarm is sounded. • Recording is stopped. • Replace the memory card or delete unnecessary clips.
▭ (Once every second, flash in red)	Battery is almost consumed.	All the tally lamps will flash once every second. • The current operation will continue. • Replace with a fully charged battery, or connect the AC adaptor.
Remaining recording capacity display of the memory card (Flashes once every second during recording)	The remaining recording capacity of the memory card is getting low.	• Recording will continue. • Replace the memory card as necessary.

Alert

Screen display Camera image screen	Description	Behavior and cause
[SIMUL REC WARNING <SLOT 1>]/ [SIMUL REC WARNING <SLOT 2>]	An error has occurred in one of the memory cards during simultaneous recording.	A message is displayed for approximately five seconds. • Recording to the other memory card will continue.
[SIMUL REC WARNING <SLOT 1>]/ [SIMUL REC WARNING <SLOT 2>]	Recording has been attempted while the number of clips has exceeded the limit on one of the memory cards during simultaneous recording.	A message is displayed for approximately five seconds. • Recording to the other memory card will continue. • [SIMUL REC WARNING <SLOT 1>] [<OVER MAX NUM. OF CLIPS>]/[SIMUL REC WARNING <SLOT 2>] [<OVER MAX NUM. OF CLIPS>] is displayed in the warning display field of the STATUS screen for the mode check. • Replace the memory card or delete unnecessary clips.
[BACKGROUND REC WARNING <SLOT 1>]/[BACKGROUND REC WARNING <SLOT 2>]	An error has occurred in one of the memory cards during background recording.	A message is displayed for approximately five seconds. • Recording to the other memory card will continue.
[BACKGROUND REC WARNING <SLOT 1>]/[BACKGROUND REC WARNING <SLOT 2>]	Recording has been attempted while the number of clips has exceeded the limit on one of the memory cards during background recording.	A message is displayed for approximately five seconds. • Recording to the other memory card will continue. • [BACKGROUND REC WARNING <SLOT 1>] [<OVER MAX NUM. OF CLIPS>]/[BACKGROUND REC WARNING <SLOT 2>] [<OVER MAX NUM. OF CLIPS>] is displayed in the warning display field of the STATUS screen for the mode check. • Replace the memory card or delete unnecessary clips.
[FAN STOPPED]	The fan has stopped.	A message is displayed. • The current operation will continue. • Stop the use immediately when the fan has stopped, and consult the dealer. • If the fan has stopped, temperature of the camera will rise. Therefore, do not use the camera for a long period of time.
[ENCRYPTED CARD <SLOT 1>]/ [ENCRYPTED CARD <SLOT 2>]	microP2 card formatted with encryption with CPS (Content Protection System) password is inserted.	A message is displayed for approximately five seconds. • The camera does not support the CPS function of the microP2 card. Insert a microP2 card that is not formatted with encryption with CPS password. • Formatting microP2 card, which was formatted with encryption with CPS password, in the camera will enable microP2 card to be used as unencrypted card.
[REINSERT OR CHECK CARD <SLOT 1>]/[REINSERT OR CHECK CARD <SLOT 2>]	The memory card cannot be recognized properly because a recording medium which is not supported has been inserted or there is dirt on the terminal of the memory card.	A message is displayed for approximately five seconds. • Check the memory card that is inserted. • Insert the memory card again if displayed when inserting a memory card.
[FORMAT ERROR CARD <SLOT 1>]/ [FORMAT ERROR CARD <SLOT 2>]	A memory card with management information out of specifications has been inserted. (Include when the system frequency (59.94 Hz system or 50.00 Hz system) for the AVCHD format of the memory card is different from the setting in the [SYSTEM] menu → [FREQUENCY])	A message is displayed for approximately five seconds. • Insert a memory card that can record. • The system frequency information for the AVCHD format is confirmed at the time of formatting or at the first recording.
[NOT SDXC CARD <SLOT 1>]/[NOT SDXC CARD <SLOT 2>]	A SDHC memory card that cannot record the MOV format data or a 32 GB microP2 card is inserted when [FILE FORMAT] is set to MOV format.	A message is displayed for approximately five seconds. • Insert a SDXC memory card or 64 GB microP2 card.
[INCOMPATIBLE CARD <SLOT 1>]/ [INCOMPATIBLE CARD <SLOT 2>]	A memory card that may not be able to record due to slow writing speed has been inserted.	A message is displayed for approximately five seconds. • The current operation will continue. • Use a memory card with sufficient writing speed.
[DIR NG CARD <SLOT 1>]/[DIR NG CARD <SLOT 2>]	A microP2 card with inappropriate directory placement is inserted when [FILE FORMAT] is set to P2 format	A message is displayed for approximately five seconds. • The current operation will continue. • Take a backup of the card immediately, and use again after formatting.
[RUN DOWN CARD <SLOT 1>]/[RUN DOWN CARD <SLOT 2>]	A microP2 card exceeding the specified number of overwrites is inserted.	A message is displayed for approximately five seconds. • The current operation will continue. • Replacement of the microP2 card is recommended.
[SD CARD <SLOT 1>]/[SD CARD <SLOT 2>]	SDHC/SDXC memory card is inserted when [FILE FORMAT] is set to P2 format and the [VIDEO OUT/LCD/VF] menu → [INDICATOR] → [SD CARD WARNING] is set to [ON].	A message is displayed for approximately five seconds. • The current operation will continue. • Set [SD CARD WARNING] to [OFF].
[BACKUP BATT EMPTY]	Voltage lowering of the backup battery for internal clock was detected when the power is set to < ┃ > (ON).	A message is displayed for approximately five seconds. • The current operation will continue. • Set the date/time again after charging the built-in battery.

Message

Screen display Camera image screen	Description	Behavior and cause
[CANNOT PLAY.]	This is a clip that cannot be played back. (When it cannot be played back due to difference of the system frequency, etc.) An error has occurred during playback, and the playback has stopped.	A message is displayed. • Confirm if the system frequency of the clip is the same as the system frequency of the camera. • Check the clip.
[CANNOT DELETE.]	This is a clip that cannot be deleted.	A message is displayed. • Match the device and content versions.
[CANNOT RECORD. THE NUMBER OF CLIPS HAS EXCEEDED THE MAXIMUM LIMIT.]	The number of clips that can be recorded has reached the maximum.	A message is displayed. • Replace the memory card or delete unnecessary clips.
[CARD ERROR. PLEASE REFORMAT.]	Formatting of the memory card has failed.	A message is displayed. • Format it again.
[CANNOT RE-CONNECT.]	This is not a clip recorded over multiple memory cards, so the re-connecting of the clip is not possible.	A message is displayed. • Check the selected clip.
[COPY IMPOSSIBLE. TOO LARGE CLIP CONTAINED.]	The file for P2 clip exceeding 4 GB cannot be copied to a memory card with 32 GB or less.	A message is displayed. • Copy to a memory card with the capacity exceeding 32 GB.
[CANNOT COPY TO SAME CARD.]	The clip recorded over multiple memory cards cannot be copied to a same card.	A message is displayed. • Copy to a card not containing a clip that is recorded over multiple memory cards.
[Repair failed.]	Repairing the clip where an error occurred has failed because the power was disconnected or the memory card was removed during recording. Restoring of the management information has failed.	A message is displayed. • Check the memory card.
[UNABLE TO FORMAT.]	This memory card cannot be formatted.	A message is displayed. • Check the memory card.
[CANNOT PROTECT.]	This is a clip that cannot be protected.	A message is displayed. • Match the device and content versions.
[THE CLIP IS PROTECTED. PLEASE CANCEL PROTECTION.]	The clip is protected so it cannot be deleted.	A message is displayed. • Cancel the protect on the clip.
[CANNOT DELETE UNTIL TOP MENU IS DELETED. DELETE TOP MENU? (RECORDED DATA WILL NOT BE DELETED)]	The camera is trying to delete a clip on the memory card where the top menu has been created.	A message is displayed. • Delete the top menu.
[CANNOT RECORD UNTIL TOP MENU IS DELETED. DELETE TOP MENU? (RECORDED DATA WILL NOT BE DELETED)]	The memory card where the top menu was created has been inserted.	A message is displayed. • Delete the top menu.
[THUMBNAIL DATA ERROR IS DETECTED.]	An error occurred in the thumbnail information of the memory card.	A message is displayed. • Restoring of the management information is performed automatically after this.
[CANNOT RECORD - INCOMPATIBLE CONTROL DATA.]	The version of the management information on the memory card is not supported.	A message is displayed. • Match the device and content versions.
[CANNOT SET.]	This cannot be set.	A message is displayed. • Perform the setting after making it possible to set.
[THIS CLIP CANNOT BE COPIED.]	The clip cannot be copied.	A message is displayed. • Copy the clips other than the corresponding clip.
[CONTROL DATA ERROR HAS BEEN DETECTED. (SD CARD)]	An error occurred in the management information of the memory card.	A message is displayed. • Restoring of the management information is performed automatically after this.
[COPY FAILED. PLEASE CHECK THE CARD.]	The clip has failed to copy due to an error in the memory card.	A message is displayed. • Check the memory card.
[CANNOT COPY - THE NUMBER OF CLIPS HAS REACHED MAXIMUM.]	The number of clips that can be copied has reached the maximum.	A message is displayed. • Replace the memory card in the copy destination or delete unnecessary clips.
[LOW BATTERY. PLEASE CONNECT AC ADAPTOR OR CHANGE BATTERY.]	It is trying to copy a clip or update the camera firmware while the remaining battery level is insufficient.	A message is displayed. • Replace with a fully charged battery, or connect the AC adaptor.
[CANNOT PLAY THIS CLIP ON THIS MODEL.]	This is a clip that cannot be played back with the camera.	A message is displayed. • Playback on a device that can playback.
[Cannot copy: contains recordings from other devices.]	The clip recorded in other device cannot be copied.	A message is displayed. • Copy the clips other than the corresponding clip.
[INVALID]	Operation is disabled.	A message is displayed. • Operate after the the operation becomes enabled.
[Cannot record - Playlist capacity is full.]	The camera tried to record on a memory card where the number of playlists for recording has reached the maximum.	A message is displayed. • Replace the memory card or delete unnecessary clips.
[Cannot copy - Playlist capacity is full.]	The camera tried to copy to a memory card where the number of playlists for recording has reached the maximum.	A message is displayed. • Replace the memory card or delete unnecessary clips.

Screen display Camera image screen	Description	Behavior and cause
[Exceeds capacity. Please reselect.]	The remaining recording capacity of the memory card for the copy destination is insufficient.	A message is displayed. • Select the clip to copy again, or secure enough space in the remaining recording capacity on the memory card for the copy destination.
[Check the destination media.]	An error has occurred on the memory card for the copy destination while copying.	A message is displayed. • Confirm the memory card for the copy destination.
[LOAD NG]	Loading of the scene file has failed.	A message is displayed. • Check the memory card.
[SAVE NG]	Writing of the scene file has failed.	A message is displayed. • Check the memory card.
[DISCONNECT USB CABLE.]	Due to an OS non-compatible error, five minutes has elapsed until the service mode connection is established.	A message is displayed. • Confirm if the OS in use is supported by the camera.
[CARD LOCKED.]	The camera tried to protect or delete a clip on a memory card that has been locked. The camera tried to copy a clip to the memory card that has been locked.	A message is displayed. • Unlock the memory card.
[CANNOT SELECT MORE CLIPS.]	It has tried to select more than 99 clips.	A message is displayed. • Execute the process such as copying by every 99 clips.
[SELECT THE CLIP TO BE DELETED.]	It has tried to delete a clip without choosing any.	A message is displayed. • Select a clip to be deleted.
[SELECT THE CLIPS TO COPY.]	It has tried to copy a clip without choosing any.	A message is displayed. • Select a clip to be copied.
[SELECT THE CLIP TO RE-CONNECT.]	It has tried to re-connect without choosing any clip.	A message is displayed. • Select the clip to be re-connected.
[NO CARD.]	Copying was tried to be executed without inserting a memory card into the card slot.	A message is displayed. • Insert a memory card into the card slot.
[REINSERT OR CHECK CARD <SLOT 1>]/[REINSERT OR CHECK CARD <SLOT 2>]	It has tried to copy to an error card.	A message is displayed. • Check the memory card.
[CANNOT COPY.]	Copying was attempted while the system frequency (59.94 Hz and 50.00 Hz) of the memory card to copy from and the memory card to copy to are different for content recorded in AVCHD format.	A message is displayed. • Set the same system frequency (59.94 Hz system or 50.00 Hz system) for the content of the memory card to copy from and the memory card to copy to. • The system frequency information for the AVCHD format is confirmed at the time of formatting or at the first recording.
[CANNOT RECORD.]	Cannot be recorded.	A message is displayed. • Perform recording after making it possible.
[REC PAUSE INVALID]	The camera tried to stop the next recording before the previous recording finished writing to the memory card.	A message is displayed. • Stop recording after writing to the memory card is complete. Recording can be stopped after the message that is displayed disappears.
[WRITE PROTECTED]	The memory card has been write-protected.	A message is displayed. • Insert a memory card with write access.

Recording function that cannot be used simultaneously

Depending on the recording function that is set, there are recording functions that cannot be used simultaneously.

- Meaning of the symbols used in the table are as follows.
  - ✓: Can be used simultaneously.
  - —: Cannot be used simultaneously.

	Recording function that is set			
Recording function to additionally set	**Pre-recording*1*2**	**Relay recording**	**Simultaneous recording**	**Interval recording*3*4*6*7*9**
Pre-recording*1*2		✓	✓	—
Relay recording	✓		—	—
Simultaneous recording	✓	—		✓
Interval recording*3*4*6*7*9	—	—	✓	
Background recording*1*3*8*9*10	—	—	—	—
VFR/Super slow recording*3*4*5*10	—	—	—	—
Proxy recording*11*12*13	✓	✓	—	—

	Recording function that is set		
Recording function to additionally set	**Background recording*1*3*8*9*10**	**VFR/Super slow recording*3*4*5*10**	**Proxy recording*11*12*13**
Pre-recording*1*2	—	—	✓
Relay recording	—	—	✓
Simultaneous recording	—	—	—
Interval recording*3*4*6*7*9	—	—	—
Background recording*1*3*8*9*10		—	—
VFR/Super slow recording*3*4*5*10	—		—
Proxy recording*11*12*13	—	—	

*1 Time code is fixed to free run.
*2 The pre-recording is canceled once when three hours has passed without starting the recording.
*3 Cannot set simultaneously in the following cases.
- When recording in AVCHD format

*4 Time code is fixed to recording run.
*5 This cannot be set when the frequency of the [SYSTEM] menu → [REC FORMAT] is set to 50.00i/59.94i.
*6 The time code is fixed to [NDF].
*7 The [VIDEO OUT/LCD/VF] menu → [SDI OUT] → [SDI REC REMOTE] and the [VIDEO OUT/LCD/VF] menu → [HDMI OUT] → [HDMI REC REMOTE] will not operate.
*8 This will not operate when anything other than 1080p/1080i is selected in the [SYSTEM] menu → [REC FORMAT].
*9 Cannot set simultaneously when recording format is set to AVC-Intra 200/AVC-Intra 100/AVC-Intra 50.
*10 Cannot set simultaneously in the following cases.
- When recording in P2 format

*11 Cannot be set when the file format is MOV or AVCHD.
*12 Cannot be set when the recording format is AVC-G12.
*13 Cannot be simultaneously used with recording of the time stamp and the streaming on network.

Updating the camera firmware

Confirm the firmware version of the camera in the [OTHERS] menu → [INFORMATION] → [VERSION], access the most current information regarding firmware in the website described in NOTE, and download the firmware as necessary.

NOTE

- Update is completed by loading the downloaded file to the camera via the memory card. Insert the memory card that stores the update file into card slot 1, and select the [OTHERS] menu → [INFORMATION] → [UPDATE]. For update method, refer to the support desk at the following website: https://pro-av.panasonic.net/
- When updating the firmware, use the AC adaptor or sufficiently charged battery.
- Do not turn off the power while updating the firmware. Rewriting of the firmware may fail and the camera may not be activated.

Cleaning and storing

Cleaning the camera body

- Remove the battery or disconnect the AC cable from the power outlet before cleaning.
- Do not use benzine or thinner to clean the camera. Using benzine or thinner may cause deformation or peeling off of the paint of the camera body.
- Wipe the camera body with a soft and clean cloth. If there is heavy dirt attached, wipe the camera recorder using a cloth soaked in kitchen detergent diluted with water, and then wipe it with a dry cloth.

Cautions when storing the camera recorder

Remove the battery from the camera when storing. Store them in a place where humidity is low and temperature is relatively constant.

- Recommended temperature: 15 °C to 25 °C
- Recommended relative humidity: 40% to 60%

■ Camera

- Wrap the camera recorder with a soft cloth so that dust does not get into it.

■ Battery

- The battery life shortens where the temperature is extremely high or low.
- Storing in a place where there is heavy oil smoke or dust may lead to malfunctions due to rust on terminal connectors, etc.
- Do not let the battery terminal contact a metal object (such as a necklace or hairpin). Short circuit may occur between terminals and it may lead to heat generation. Touching on a heated part may cause severe burns.
- Store the battery with electrically discharged. When storing for a long period of time, it is recommended to charge the battery once a year, and then use up the battery capacity by the camera before storing it again.

■ Memory card

- If you remove it from the camera recorder, be sure to put it in its case.
- Do not place it in a place where there is corrosive gas.
- Do not place it in a place where temperature gets high, such as in a car or under direct sunlight.
- Do not place it in a high humid or dusty place.

Chapter 11 Specification

This chapter describes the specifications of this product.

Dimensions

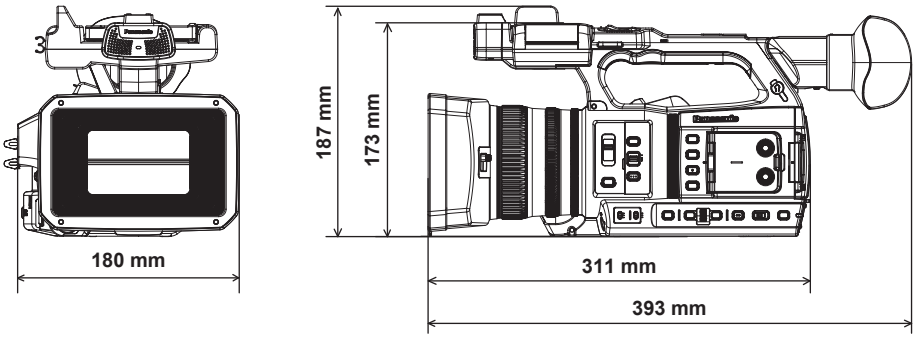

Specifications

General

Power
DC ⎓ 7.28 V (when battery is used)
DC ⎓ 12 V (when the AC adaptor is used)
Power consumption
17 W (when the LCD monitor is used)

indicates safety information.

Operating ambient temperature	0 °C – 40 °C
Operating ambient humidity	10% – 80% (relative humidity, no condensation)
Mass	Approx. 1.9 kg (body only, excluding lens hood, battery, and accessories) Approx. 2.3 kg (including lens hood, battery, and accessories of microphone holder)
Dimensions (W×H×D)	Camera (including lens hood) 180 mm×173 mm×311 mm (excluding eye cup and protrusion)

Camera unit

Pickup device	1.0-inch MOS solid state image sensor
Number of pixels	Number of effective pixels: Approx. 15.03 million pixels
Lens	Optical image stabilizer lens, motorized 20x zoom F2.8 – F4.5 (f=8.8 mm – 176 mm) 35 mm conversion: 24.5 mm – 490 mm (16:9)
Filter diameter	67 mm
Optical filter	• ND filter <CLR>, <1/4>, <1/16>, <1/64> • IR cut filter [ON]/[OFF] by assigning [IR REC] to the USER button (switched by menu)
Minimum object distance (M.O.D)	10 cm (wide angle) from the lens 1.0 m (telephoto angle) from the lens
Color temperature setting	ATW, ATW LOCK, Ach, Bch, preset 3200 K/preset 5600 K/VAR (2000 K – 15000 K)
Gain setting	<L>/<M>/<H> selector switch • When the [CAMERA] menu → [SW MODE] → [GAIN/ISO MODE] → [dB] is set –3 dB – 18 dB (1 dB step) (When assigning [S.GAIN] to the USER button: Switching between 24 dB, 30 dB, and 36 dB) • When the [CAMERA] menu → [SW MODE] → [GAIN/ISO MODE] → [ISO] is set [ISO 400], [ISO 500], [ISO 640], [ISO 800], [ISO 1000], [ISO 1250], [ISO 1600], [ISO 2000], [ISO 2500], [ISO 3200], [ISO 4000], [ISO 5000], [ISO 6400], [ISO 8000], [ISO 10000], [ISO 12800]
Shutter speed	When the [SYSTEM] menu → [FREQUENCY] → [59.94Hz] is set • 59.94i/59.94p mode: 1/60 sec. (shutter off), 1/100 sec., 1/120 sec., 1/250 sec., 1/500 sec., 1/1000 sec., 1/2000 sec., 1/4000 sec., 1/8000 sec., 1/10000 sec. • 29.97p mode: 1/30 sec., 1/50 sec. (shutter off), 1/60 sec., 1/100 sec., 1/120 sec., 1/250 sec., 1/500 sec., 1/1000 sec., 1/2000 sec., 1/4000 sec., 1/8000 sec., 1/10000 sec. • 23.98p mode: 1/24 sec., 1/48 sec., 1/50 sec. (shutter off), 1/60 sec., 1/100 sec., 1/120 sec., 1/250 sec., 1/500 sec., 1/1000 sec., 1/2000 sec., 1/4000 sec., 1/8000 sec., 1/10000 sec. When the [SYSTEM] menu → [FREQUENCY] → [50.00Hz] is set • 50i/50p mode: 1/50 sec. (shutter off), 1/60 sec., 1/100 sec., 1/120 sec., 1/250 sec., 1/500 sec., 1/1000 sec., 1/2000 sec., 1/4000 sec., 1/8000 sec., 1/10000 sec. • 25p mode: 1/25 sec., 1/50 sec. (shutter off), 1/60 sec., 1/100 sec., 1/120 sec., 1/250 sec., 1/500 sec., 1/1000 sec., 1/2000 sec., 1/4000 sec., 1/8000 sec., 1/10000 sec.
Slow shutter speed	When the [SYSTEM] menu → [FREQUENCY] → [59.94Hz] is set • 59.94i/59.94p mode: 1/1 sec., 1/2 sec., 1/4 sec., 1/6 sec., 1/15 sec., 1/30 sec. • 29.97p mode: 1/1 sec., 1/2 sec., 1/4 sec., 1/6 sec., 1/15 sec. • 23.98p mode: 1/1 sec., 1/2 sec., 1/4 sec., 1/6 sec., 1/12 sec. When the [SYSTEM] menu → [FREQUENCY] → [50.00Hz] is set • 50i/50p mode: 1/1 sec., 1/2 sec., 1/4 sec., 1/6 sec., 1/12 sec., 1/25 sec. • 25p mode: 1/1 sec., 1/2 sec., 1/4 sec., 1/6 sec., 1/12 sec.

Synchro scan shutter speed	When the [SYSTEM] menu → [FREQUENCY] → [59.94Hz] is set • 59.94i/59.94p mode: 1/60.0 sec. – 1/7200 sec. • 29.97p mode 1/30.0 sec. – 1/7200 sec. • 23.98p mode 1/24.0 sec. – 1/7200 sec. When the [SYSTEM] menu → [FREQUENCY] → [50.00Hz] is set • 50i/50p mode: 1/50.0 sec. – 1/7200 sec. • 25p mode 1/25.0 sec. – 1/7200 sec.
Shutter aperture angle	3.0 deg – 180.0 deg – 360.0 deg (in 0.5 deg steps, angle display)
VFR recording frame rate	• When the [SYSTEM] menu → [FREQUENCY] → [59.94Hz] is set 1, 2, 4, 6, 9, 12, 15, 18, 20, 21, 22, 24, 25, 26, 27, 28, 30, 32, 34, 36, 40, 44, 48, 54, 60 (frames per second) • When the [SYSTEM] menu → [FREQUENCY] → [50.00Hz] is set 1, 2, 4, 6, 9, 12, 15, 18, 20, 21, 22, 23, 24, 25, 26, 27, 28, 30, 32, 34, 37, 42, 45, 48, 50 (frames per second)
Super slow recording	• [SYSTEM] menu → [FREQUENCY] → [59.94Hz] When the number of recording pixels is 1920×1080 (FHD) Shooting frame rate 120fps • [SYSTEM] menu → [FREQUENCY] → [50.00Hz] When the number of recording pixels is 1920×1080 (FHD) Shooting frame rate 100fps
Sensitivity	• [HIGH SENS.] mode F12 (2000 lx, 3200 K, 89.9% reflection, 2160/59.94p or 1080/59.94i) F13 (2000 lx, 3200 K, 89.9% reflection, 2160/50p or 1080/50i)

Memory card recorder

Recording media	• Card slot × 2 SDHC memory card SDXC memory card : UHS-I/UHS-II, UHS Speed Class 3 compatible, video Speed Class V90 compatible microP2 card (A series/B series) It is possible to record to SDXC memory cards in P2 format. Card that the operation is confirmed by Panasonic is recommended.
Recording slot	microP2/SDXC UHS-II card slot × 2
Number of recording pixels	3840×2160 (UHD), 1920×1080 (FHD), 1280×720 (HD), 720×576 (SD), 720×480 (SD) (AVC-Intra 50: 1440×1080, 960×720)
Recording file format	P2 (P2 MXF compatible), MOV (HEVC), MOV (AVC), AVCHD Proxy: MOV (AVC)
System frequency	59.94 Hz/50.00 Hz
Recording format	• P2 AVC-Intra 422, AVC-LongG50, AVC-LongG25, AVC-LongG12 AVC-Intra 200, AVC-Intra 100, AVC-Intra 50 • Proxy: 4:2:0 (8-bit) AVC-Proxy G6 • MOV: 4:2:0 (10-bit) HEVC LongGOP 200M/HEVC LongGOP 150M/HEVC LongGOP 100M • MOV: 4:2:0 (8-bit) 420LongGOP 150M/420LongGOP 100M • MOV: 4:2:2 (10-bit) 422LongGOP 150M/422LongGOP 100M/422LongGOP 50M 422ALL-I 400M/422ALL-I 200M/422ALL-I 100M • AVCHD: PS/PH/HA/PM/SA
Recording video signal	3840×2160/59.94p, 50p, 29.97p, 25p, 23.98p 1920×1080/59.94p, 50p, 29.97p, 25p, 23.98p, 59.94i, 50i 1280×720/59.94p, 50p 1440×1080/59.94i, 50i (AVC-Intra 50) 960×720/59.94p, 50p (AVC-Intra 50) 720×480/59.94i, 720×576/50i

Recording and playback time	When using a 64 GB microP2 card • 1080-59.94p, 50p/AVC-Intra 422, 1080-59.94i, 50i/AVC-Intra 200 Approx. 32 minutes • 1080-59.94i, 50i/AVC-Intra 100 Approx. 1 hour 4 minutes • 1080-59.94i, 50i/AVC-LongG50 Approx. 2 hours 8 minutes • 1080-59.94i, 50i/AVC-LongG25 Approx. 4 hours 16 minutes When using a 64 GB SDXC memory card • 3840×2160/420LongGOP 150M/59.94p, 50p Approx. 55 minutes • 1920×1080/420LongGOP 100M/59.94p, 50p Approx. 1 hour 20 minutes • 1920×1080/420LongGOP 50M/29.97p, 25p, 23.98p Approx. 2 hours 40 minutes
Two-slot function	Simultaneous recording, relay recording, background recording
Special recording	Pre-recording, interval recording, time stamp recording, proxy recording

Digital video

Number of quantizing bits	• P2: 4:2:2 (10-bit)/4:2:0 (10-bit (AVC-Intra 50))/4:2:0 (8-bit (AVC-LongG12)) • Proxy: 4:2:0 (8-bit (AVC-Proxy G6)) • MOV: 4:2:2 (10-bit)/4:2:0 (8-bit)/4:2:0 (10-bit (HEVC)) • AVCHD: 4:2:0 (8-bit)
Video compression format	• P2: AVC-Intra 422/AVC-LongG50/AVC-LongG25/AVC-LongG12/AVC-Proxy G6 (proxy): MPEG-4 AVC/H.264 High Profile AVC-Intra 200/AVC-Intra 100/AVC-Intra 50: MPEG-4 AVC/H.264 Intra Profile • MOV: H.264/MPEG-4 AVC High Profile, H.265/MPEG-H HEVC Main10 Profile

Digital audio

Recording audio signal	• P2: 48 kHz/24 bits, 4ch (excluding AVC-LongG12) 48 kHz/16 bits, 4ch (AVC-Intra 100/AVC-Intra 50/AVC-LongG12) 24 bits/16 bits of AVC-Intra 100/AVC-Intra 50 can be selected by menu • Proxy: 48 kHz/16-bit, 2ch • MOV: 48 kHz/24-bit, 4ch • AVCHD: 48 kHz/16-bit, 2ch
Audio recording format	• P2: LPCM • Proxy: AAC • MOV: LPCM • AVCHD: Dolby Audio™
Headroom	12 dB/18 dB/20 dB switchable menu

Streaming

Video compression format	H.264/MPEG-4 AVC Main Profile H.264/MPEG-4 AVC High Profile
Video resolution	3840×2160 (UHD), 1920×1080 (FHD), 1280×720 (HD), 640×360, 360×180
Streaming method	Unicast, Multicast
Frame rate	• When set to the [SYSTEM] menu → [FREQUENCY] → [59.94Hz] 24 fps, 30 fps, 60 fps • When set to the [SYSTEM] menu → [FREQUENCY] → [50.00Hz] 25 fps, 50 fps

Bit rate	• When 3840×2160 (UHD) 75 Mbps, 50 Mbps, 25 Mbps, 12 Mbps, 8 Mbps • Anything other than above 24 Mbps, 20 Mbps, 16 Mbps, 14 Mbps, 8 Mbps, 6 Mbps, 4 Mbps, 3 Mbps, 2 Mbps, 1.5 Mbps, 1 Mbps, 0.7 Mbps, 0.5 Mbps
Audio compression format	AAC-LC: 48 kHz/16-bit, 2ch
Supported protocol	RTSP/RTP/RTMP/RTMPS/SRT

Video output

<SDI OUT> terminal	• BNC×1 HD SDI: 0.8 V [p-p], 75 Ω SD SDI: 0.8 V [p-p], 75 Ω • SDI remote control support • Output format (4:2:2 (10-bit) output) 1920×1080: 59.94p, 50p, 59.94i, 50i, 25PsF, 23.98PsF, 29.97PsF 1280×720: 59.94p, 50p 720×480: 59.94i 720×576: 50i
<HDMI> terminal	• HDMI type A×1 (not compatible with VIERA Link) • HDMI remote control support • Output format (4:2:2 (10-bit) output) 3840×2160: 59.94p, 50p, 29.97p, 25p, 23.98p 1920×1080: 59.94p, 50p, 59.94i, 50i, 29.97p, 25p, 23.98p 1280×720: 59.94p, 50p 720×480: 59.94p 720×576: 50p
<AV OUT> terminal	3.5 mm diameter mini jack Composite: 1.0 V [p-p], 75 Ω

Audio input/output

Built-in microphone	Supports stereo microphone
<AUDIO INPUT 1>/<AUDIO INPUT 2> terminal	XLR×2, 3-pin Input high impedance, <LINE>/<MIC>/<+48V> (switch selection) • <LINE>: 4 dBu/0 dBu (menu selection) • <MIC>: –40 dBu/–50 dBu/–60 dBu (menu selection)
<SDI OUT> terminal	LPCM 4ch
<HDMI> terminal	LPCM 2ch/4ch (selected by menu)
<AV OUT> terminal	3.5 mm diameter mini jack Output level: 600 Ω, 316 mV
Headphone terminal	3.5 mm diameter stereo mini jack × 1
Speaker	20 mm diameter, round ×1

Other input/output

<TC IN/OUT> terminal	BNC×1 Used as input/output terminal, input/output switch by menu • Input: 1.0 V – 4.0 V [p-p], 10 kΩ • Output: 2.0 V±0.5 V [p-p], low impedance
<REMOTE> terminal	2.5 mm diameter super mini jack × 1 Remote control terminal of serial communication Analogue remote control used for previous Panasonic models cannot be used.
<USB2.0 HOST> terminal	Type A connector, 4-pin (5 V, 0.5 A), for attaching the wireless module (optional), connection to USB tethering device
<USB3.0 DEVICE> terminal	USB 3.1 GEN1 type C connector, with USB mass storage function, without USB bus-powered function
<LAN> terminal	RJ-45: 1000BASE-T/100BASE-TX/10BASE-T
<DC IN 12V> terminal	DC12 V, EIAJ type 4

Monitor

LCD monitor	3.2-inch TFT LCD (3:2): Approx. 1620000 dots, touch panel compatible Video display area (16:9): Approx. 1370000 dots
Viewfinder	0.39-inch OLED (organic EL display) (4:3): Approx. 2360000 dots Video display area (16:9): Approx. 1770000 dots

AC adaptor

Power source
AC ∼ 100 V – 240 V, 50 Hz/60 Hz, 1.2 A
Power output
DC ⎓ 12 V, 3.0 A

☐ indicates safety information.

Operating ambient temperature	0 °C – 40 °C
Operating ambient humidity	10% – 90% (relative humidity, no condensation)
Mass	Approx. 225 g
Dimensions (W×H×D)	115 mm×37 mm×57 mm (excluding the DC cable section)

Battery charger (AG-BRD50)

Input voltage
DC ⎓ 12 V, 3.0 A
Output voltage
DC ⎓ 8.4 V, 4.0 A

☐ indicates safety information.

Charging current	Maximum 4000 mA
Operating ambient humidity	10% – 80% (relative humidity, no condensation)
Mass	Approx. 230 g
Dimensions (W×H×D)	130 mm×48 mm×107 mm

Battery pack (AG-VBR59)

Voltage/capacity
DC ⎓ 7.28 V/5900 mAh 43 Wh

☐ indicates safety information.

Charging current	Maximum 4000 mA
Operating ambient humidity	10% – 80% (relative humidity, no condensation)
Mass	Approx. 230 g
Dimensions (W×H×D)	41.3 mm×51.3 mm×69.6 mm

Index

A

AC adaptor
- Attaching 31

Accessory
- Mounting 35

Area mode function 127
ATW 129
Audio input 138
- Audio device 139
- Built-in microphone 138
- Confirming setting 140
- External microphone 139
- Level adjustment 139
- Monitor 140
- Switching 138

Auto tracking white balance 129

B

Back balance 129
Background recording 143
Battery
- Charging 28
- Mounting 30
- Removing 30

Black control function 135
Brightness adjustment 126
Built-in battery 37

C

Camera image screen 60, 175
Card reader mode 188
Center marker 149
Chroma setting function 133
Clip
- Copying 164
- Deleting 165
- Link 167
- Playback 168
- Protecting 166
- Restoring 167

Clip metadata recording function 144
Clock 38
Cloud service 212
Color bars 155
Color correction function 135
CX ROP app 201

D

Date and time 38
Detail function 132
Digital zoom function 154
Dynamic range stretcher function 153

E

Error message 217
External microphone
- Mounting 34

Eye cup 33
Eye sensor 55

F

Face detection/tracking AE&AF function 152
Focus assist function 150
Frame marker 150

G

Gain 126
Gamma function 135

H

Headphones 186
High-speed shooting 137

I

Interval recording 144
Iris 126
IR recording 144

K

Knee function 136

L

LCD monitor 54
- Status display 175

Lens cover 33
Lens hood 32
Level gauge 155

M

Macro 126
Manual focus 126
Matrix function 134
Memory card 39
- Data structure 43
- Format 41
- Insert 41
- Recording time 42
- Remove 41
- Status 40
- Write-protected 40

Menu
- [AUDIO] 80
- [CAMERA] 65
- Configuration 61
- Display 62
- Initialization 64
- [NETWORK] 97
- Operation 63
- [OTHERS] 104
- [RECORDING] 93
- [SCENE FILE] 70
- [SYSTEM] 103
- [THUMBNAIL] 65
- [VIDEO OUT/LCD/VF] 83

Mirror shooting 54
Mode check 182
Monitor 187
Multi manual function 157

N

ND filter 126
Network 192
- USB tethering 193
- Wired LAN 193
- Wireless LAN 193

O

Operation icon screen 156
Optical image stabilizer function 153
Output format
- <HDMI> terminal 173
- <SDI OUT> terminal 173

P

Power
- How to turn off the power 36
- How to turn on the power 36

Pre-recording 141

R

RB gain control function 133
Recording the proxy data 148
Relay recording 141
Remote control 186
Remote operation 189
Resume play 170

S

Safety zone marker 150
Scene files 119
Screen display 58
Setup file 120
Shooting 123
Shot mark recording function 147
Shoulder strap 32
Simultaneous recording 142
Skin tone function 132
Specifications 226
Still image recording function 171
Streaming function 203
Super gain 126
Super slow 137
Switching screen 59

T

Tally lamp 56
Thumbnail 160
Thumbnail screen 160
Time code 48
  External preset 49
  Supplying to external 50
Time data 47
Time stamp function 153
Tripod 34
TV 187

U

Update 222
Usage restriction 221
USB 188
User bits 47
USER buttons
  Assignment 51
  Check 53

V

Variable frame rate 137
Viewfinder 55

W

Warning system 217
Waveform monitor function 154
White balance 128
White clip function 136
Wireless LAN
  Direct connection 194
  Wireless access point 194
Wireless module 200

Z

Zebra patterns 149
Zoom 131

Panasonic Entertainment & Communication Co., Ltd.
Web Site: https://pro-av.panasonic.net/en/

© Panasonic Entertainment & Communication Co., Ltd. 2019 - 2024